STRUCTURAL NOTES

1. CONCRETE: 28 DAY COMPRESSIVE STRENGTH f'c = 4000 psi
2. REBAR: ASTM A-615 GRADE 60
3. MESH: ASTM A-185 GRADE 65
4. DESIGN: ACI-318-05 BUILDING CODE
5. LOADS: STANDARD DUTY LOADING, 22,500 lbs
   ASTM C-857 "MINIMUM STRUCTURAL DESIGN LOADING FOR UNDERGROUND PRECAST CONCRETE UTILITY STRUCTURES"
   30% IMPACT FOR LESS THAN 2'-0" SOIL COVER
   SOIL DENSITY 120 pcf
   40 pcf E.F.P. LATERAL SOIL PRESSURE ABOVE WATERTABLE
   80 pcf E.F.P. LATERAL SOIL PRESSURE BELOW WATERTABLE
   230 psf LIVE LOAD SURCHARGE
   NO LIVE LOAD SURCHARGE FOR SOIL COVER > 8'-0"
   TOP OF VAULT AT FINISHED GRADE
   WATERTABLE 5'-0" BELOW FINISHED GRADE (ASSUMED)

GENERAL NOTES

1. CUSTOMER TO:
   VERIFY ALL VAULT FEATURES
   DO ALL GROUTING & EPOXY OF VAULTS, HOLES & SEAMS (USING NON-SHRINK GROUT)
   SUPPLY & INSTALL ALL PIPING & ELECTRICAL
   INSTALL ALL LADDERS
   DO ALL PAINTING

SHIPPING WEIGHT

64-2-33F COVER:	1,375 lbs
645 CABLE BASE:	4,770 lbs
TOTAL:	6,145 lbs

NOTE:
PENTA HEAD BOLT IS RECESSED MINIMUM ⅛" BELOW PLATE SURFACE.

PENTA HEAD BOLT TO BE LIBERALLY COATED WITH ANTI-SEIZE COMPOUND.

APPROVED
Washington State
Department of Transportation
HQ Traffic Operations Office
DATE July 30, 2012 TAT

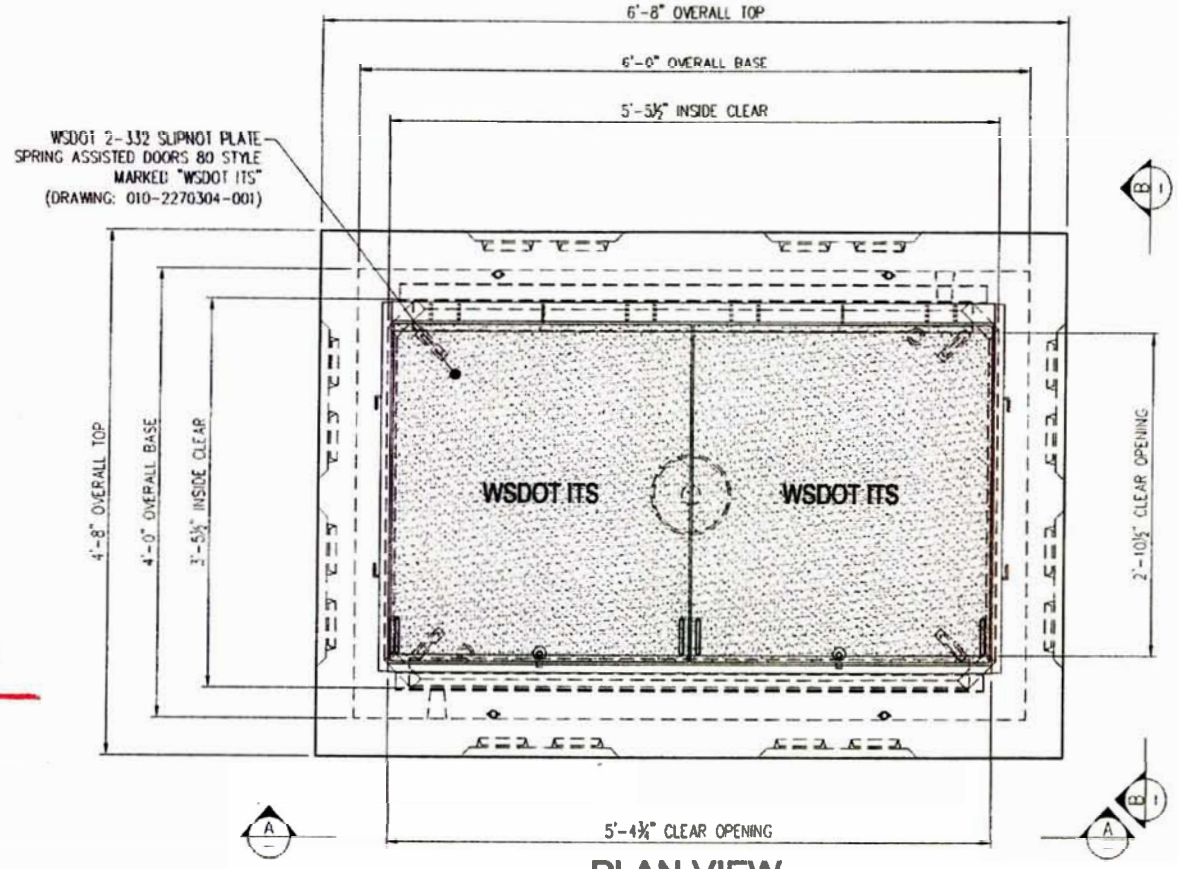

PLAN VIEW

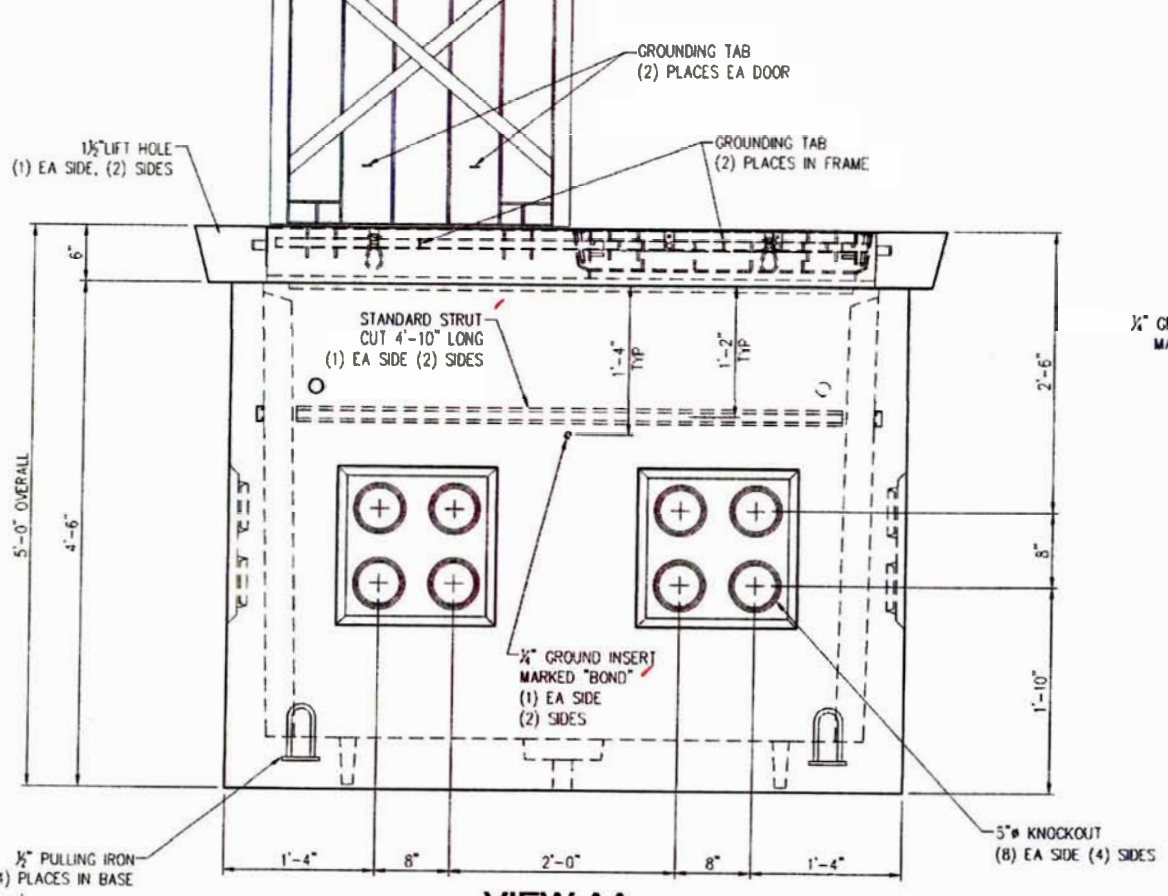

VIEW AA

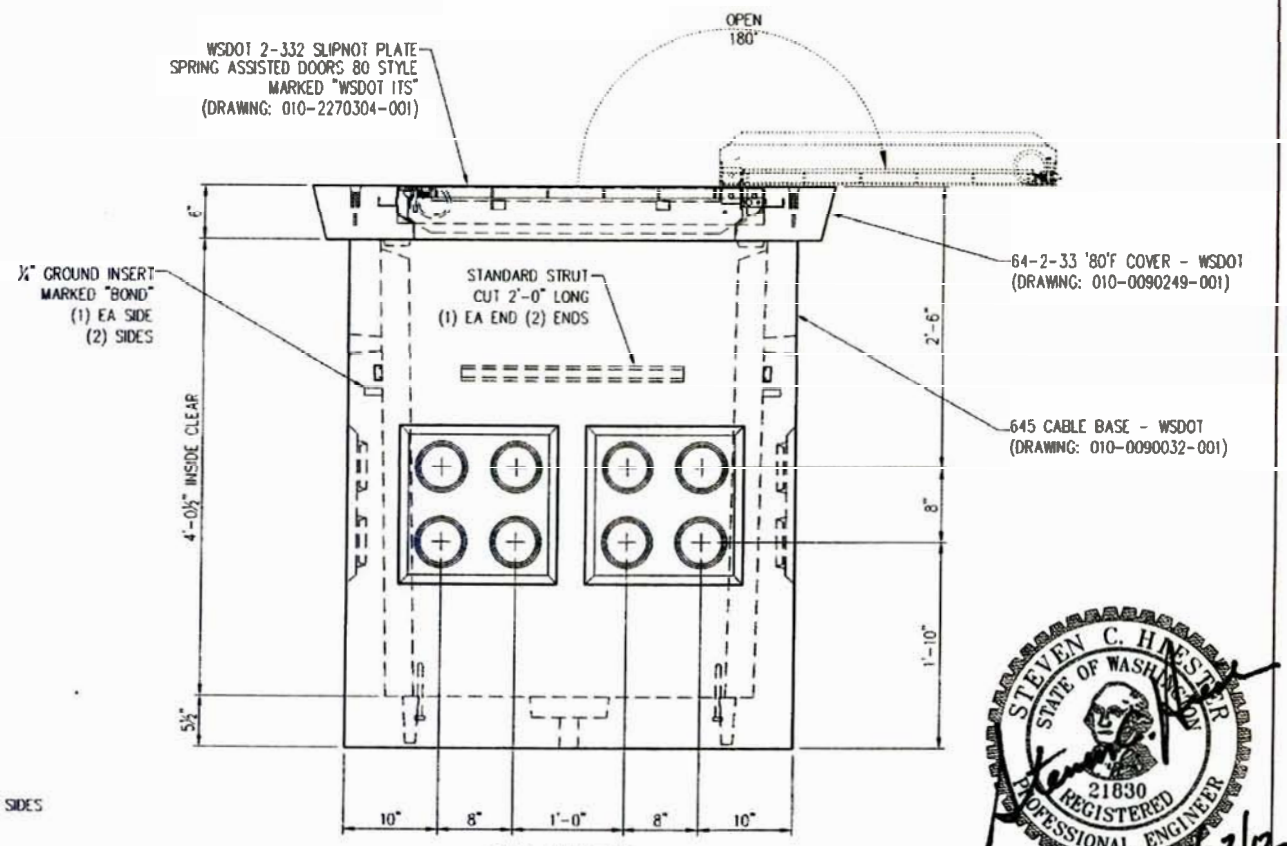

VIEW BB

STEVEN C. HINESTER
STATE OF WASHINGTON
21830
REGISTERED
PROFESSIONAL ENGINEER
11/23/12

LTR.	REVISION	DATE	BY
G	CHANGED NAME OF COVER IN CALLOUT	9/8/11	CDR
-	(SEE CAD FILE FOR COMPLETE REVISION HISTORY)	-	-

THIS DOCUMENT IS THE PROPERTY OF OLDCASTLE PRECAST, INC. IT IS SUBMITTED FOR REFERENCE PURPOSES ONLY AND SHALL NOT BE USED IN ANY WAY DETRIMENTAL TO THE INTERESTS OF SAID COMPANY. COPYRIGHT © 2011 Oldcastle Precast, Inc. All Rights Reserved

SALES		DATE	4/6/10
DESIGNER	JG	WEIGHT	6,345 lbs
CHECKED		CALC NO	

Oldcastle Precast
P.O. BOX 565 AUBURN, WA 98071-0565
PHONE: 800-882-1530 FAX: 253-735-4891

645 STD DUTY CABLE VAULT - WSDOT
645 VAULT: 5'-5.5"L x 3'-5.5"W x 4'-0.5"H (INSIDE)
CUSTOMER STANDARD PRODUCT

CUSTOMER: WASHINGTON STATE D.O.T.
SHEET: 1 OF 1
DRAWING NUMBER: 010-X806410-001
REVISION: G

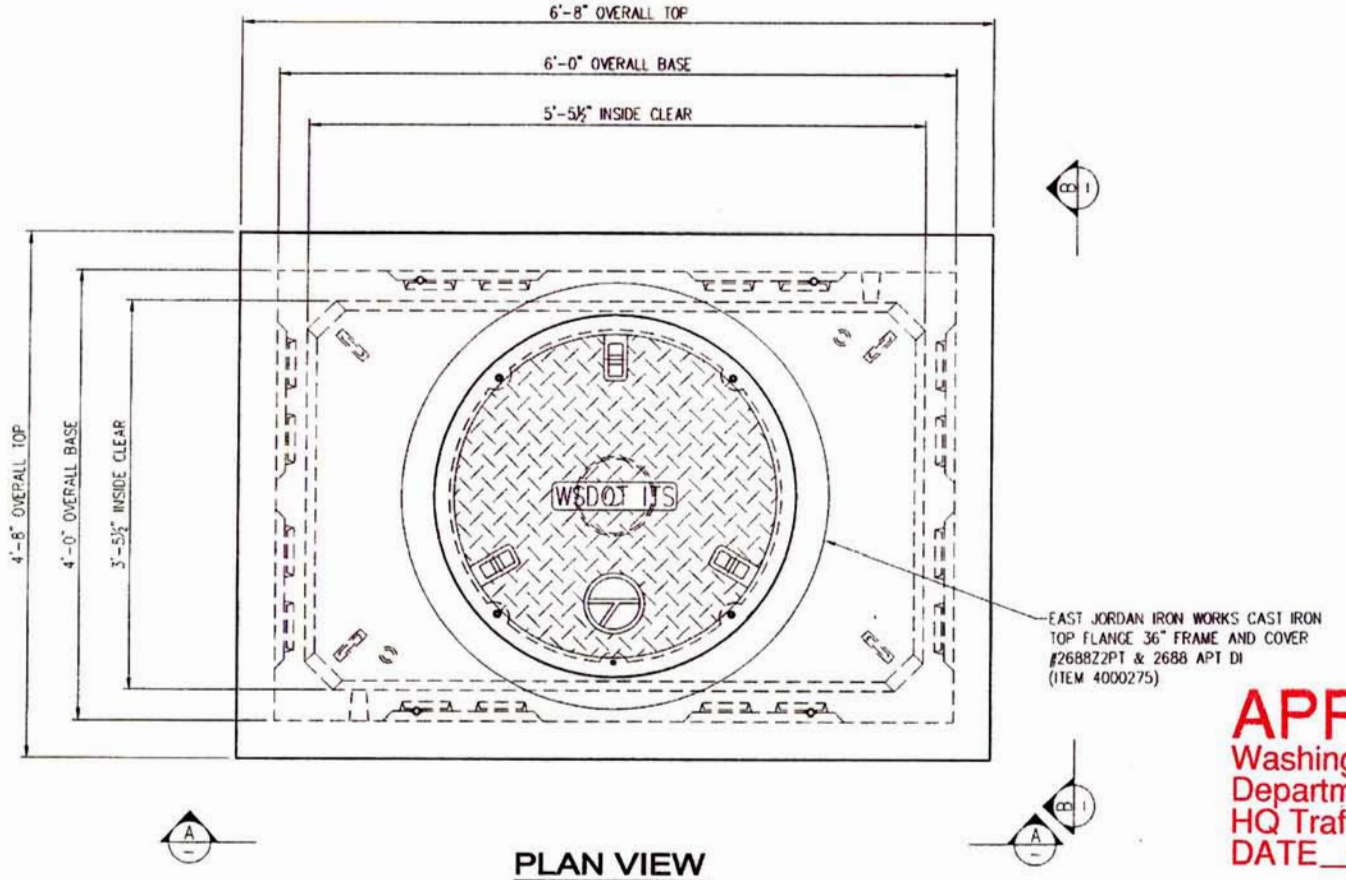

PLAN VIEW

NOTE:

PENTA HEAD BOLT IS RECESSED MINIMUM ⅛" BELOW PLATE SURFACE.

PENTA HEAD BOLT TO BE LIBERALLY COATED WITH ANTI-SEIZE COMPOUND.

STRUCTURAL NOTES

1. CONCRETE: 28 DAY COMPRESSIVE STRENGTH f'c = 4000 psi
2. REBAR: ASTM A-615 GRADE 60
3. MESH: ASTM A-185 GRADE 65
4. DESIGN: ACI-318-05 BUILDING CODE
5. LOADS: HEAVY DUTY LOADING, 46,000 lbs
   ASTM C-857 "MINIMUM STRUCTURAL DESIGN LOADING FOR UNDERGROUND PRECAST CONCRETE UTILITY STRUCTURES"
   30% IMPACT FOR LESS THAN 2'-0" SOIL COVER
   SOIL DENSITY 120 pcf
   40 pcf E.F.P. LATERAL SOIL PRESSURE ABOVE WATERTABLE
   80 pcf E.F.P. LATERAL SOIL PRESSURE BELOW WATERTABLE
   230 psf LIVE LOAD SURCHARGE
   NO LIVE LOAD SURCHARGE FOR SOIL COVER > 8'-0"
   TOP OF VAULT AT FINISHED GRADE
   WATERTABLE 5'-0" BELOW FINISHED GRADE (ASSUMED)

GENERAL NOTES

1. CUSTOMER TO:
   VERIFY ALL VAULT FEATURES
   DO ALL GROUTING & EPOXY OF VAULTS, HOLES & SEAMS (USING NON-SHRINK GROUT)
   SUPPLY & INSTALL ALL PIPING & ELECTRICAL
   INSTALL ALL LADDERS
   DO ALL PAINTING

SHIPPING WEIGHT

64-36F HD COVER:	3,170 lbs
645 CABLE BASE:	4,770 lbs
TOTAL:	7,940 lbs

APPROVED
Washington State
Department of Transportation
HQ Traffic Operations Office
DATE July 30, 2012 TAT

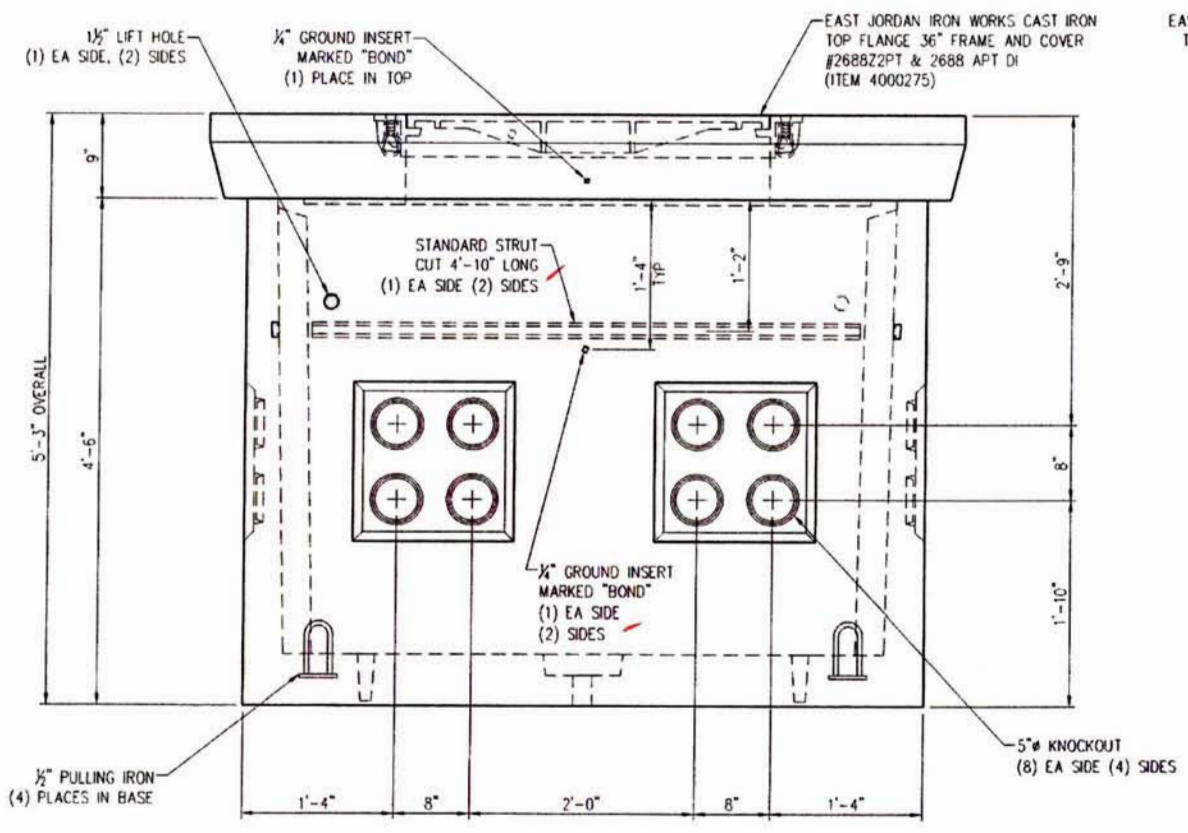

VIEW AA

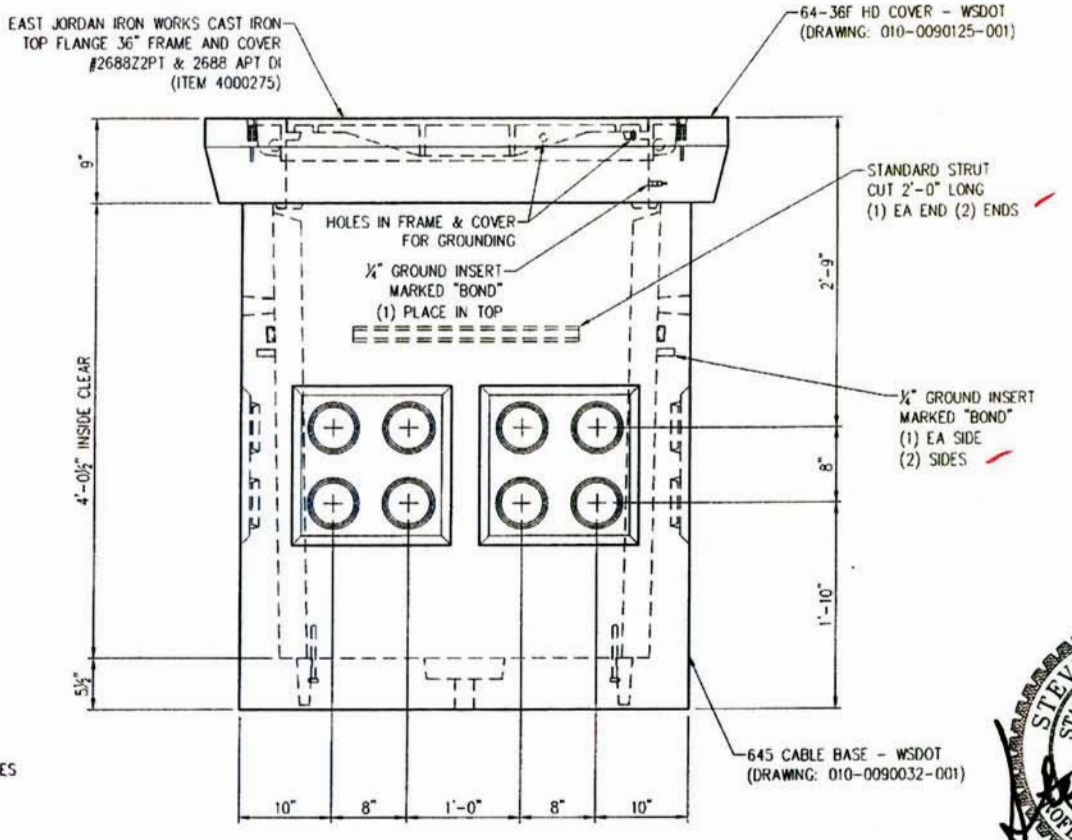

VIEW BB

STEVEN C. HESTER
STATE OF WASHINGTON
21830
REGISTERED
PROFESSIONAL ENGINEER
7/23/12

LTR.	REVISION	DATE	BY
E	CHANGED DRAWING NUMBER	10/17/11	MLF
-	(SEE CAD FILE FOR COMPLETE REVISION HISTORY)	-	-

THIS DOCUMENT IS THE PROPERTY OF OLDCASTLE PRECAST, INC. IT IS SUBMITTED FOR REFERENCE PURPOSES ONLY AND SHALL NOT BE USED IN ANY WAY INJURIOUS TO THE INTERESTS OF SAID COMPANY. COPYRIGHT © 2011 Oldcastle Precast, Inc. All Rights Reserved

SALES		DATE	4/6/10
DESIGNER	JG	WEIGHT	7,940 lbs
CHECKED		CALC NO	

Oldcastle Precast®
P.O. BOX 589 AUBURN, WA 98071-0589
PHONE: 800-852-1538 FAX: 253-735-4201

645 HVY DUTY CABLE VAULT - WSDOT
645 VAULT: 5'-5.5"L x 3'-5.5"W x 4'-0.5"H (INSIDE)
CUSTOMER STANDARD PRODUCT

CUSTOMER	WASHINGTON STATE D.O.T.
DRAWING NUMBER	010-X806410-002
SHEET	1 of 1
REVISION	E

STRUCTURAL NOTES

1. CONCRETE: 28 DAY COMPRESSIVE STRENGTH f'c = 4000 psi
2. REBAR: ASTM A-615 GRADE 60
3. MESH: ASTM A-185 GRADE 65
4. DESIGN: ACI-318-05 BUILDING CODE
5. LOADS: STANDARD DUTY LOADING, 22,500 lbs
   ASTM C-857 "MINIMUM STRUCTURAL DESIGN LOADING FOR UNDERGROUND PRECAST CONCRETE UTILITY STRUCTURES"
   30% IMPACT FOR LESS THAN 2'-0" SOIL COVER
   SOIL DENSITY 120 pcf
   40 pcf E.F.P. LATERAL SOIL PRESSURE ABOVE WATERTABLE
   80 pcf E.F.P. LATERAL SOIL PRESSURE BELOW WATERTABLE
   230 psf LIVE LOAD SURCHARGE
   NO LIVE LOAD SURCHARGE FOR SOIL COVER > 8'-0"
   TOP OF VAULT AT FINISHED GRADE
   WATERTABLE 5'-0" BELOW FINISHED GRADE (ASSUMED)

NOTE:
PENTA HEAD BOLT IS RECESSED MINIMUM ⅛" BELOW PLATE SURFACE.

PENTA HEAD BOLT TO BE LIBERALLY COATED WITH ANTI-SEIZE COMPOUND.

GENERAL NOTES

1. CUSTOMER TO:
   VERIFY ALL VAULT FEATURES
   DO ALL GROUTING & EPOXY OF VAULTS, HOLES & SEAMS (USING NON-SHRINK GROUT)
   SUPPLY & INSTALL ALL PIPING & ELECTRICAL
   INSTALL ALL LADDERS
   DO ALL PAINTING

APPROVED
Washington State
Department of Transportation
HQ Traffic Operations Office
DATE July 30, 2012 TAT

SHIPPING WEIGHT

64-2-33F COVER:	1,375 lbs
645 SPLIT CABLE BASE:	3,210 lbs
TOTAL:	4,585 lbs

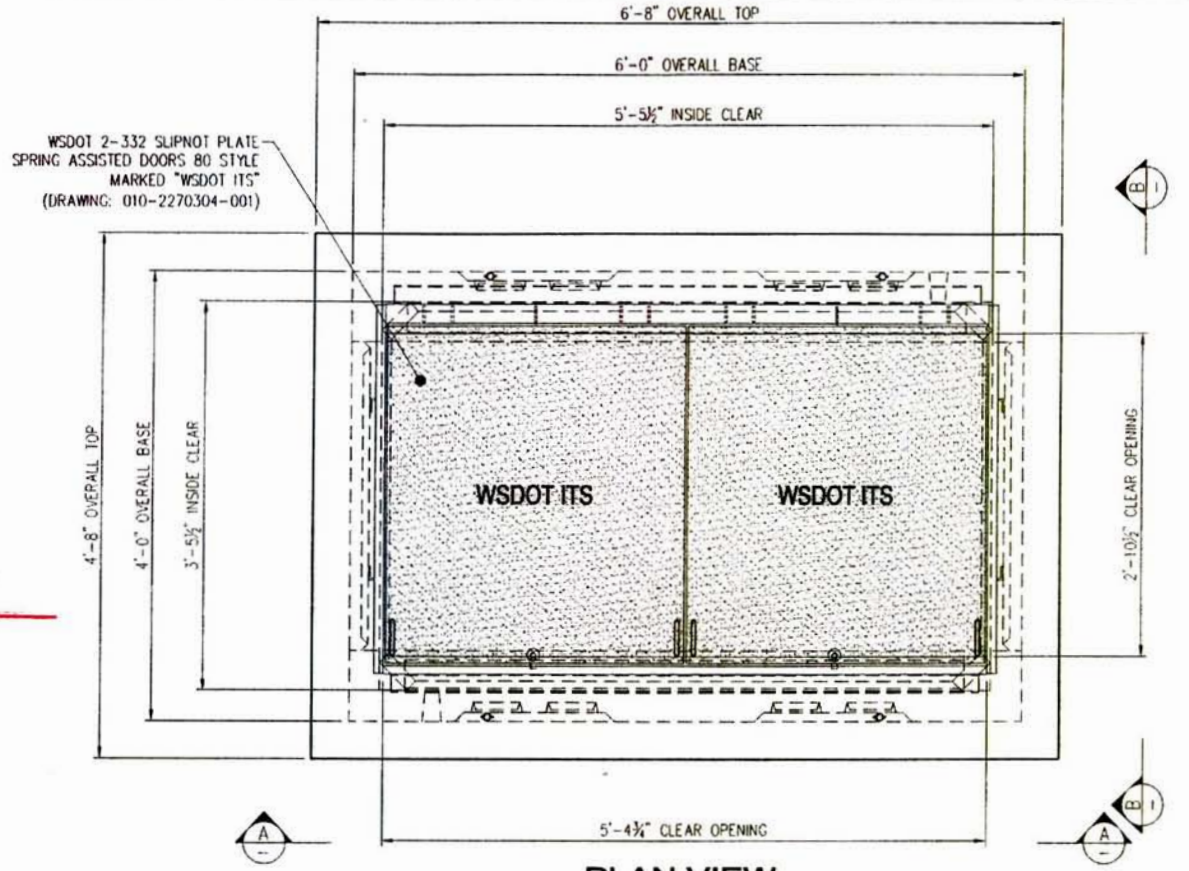

PLAN VIEW

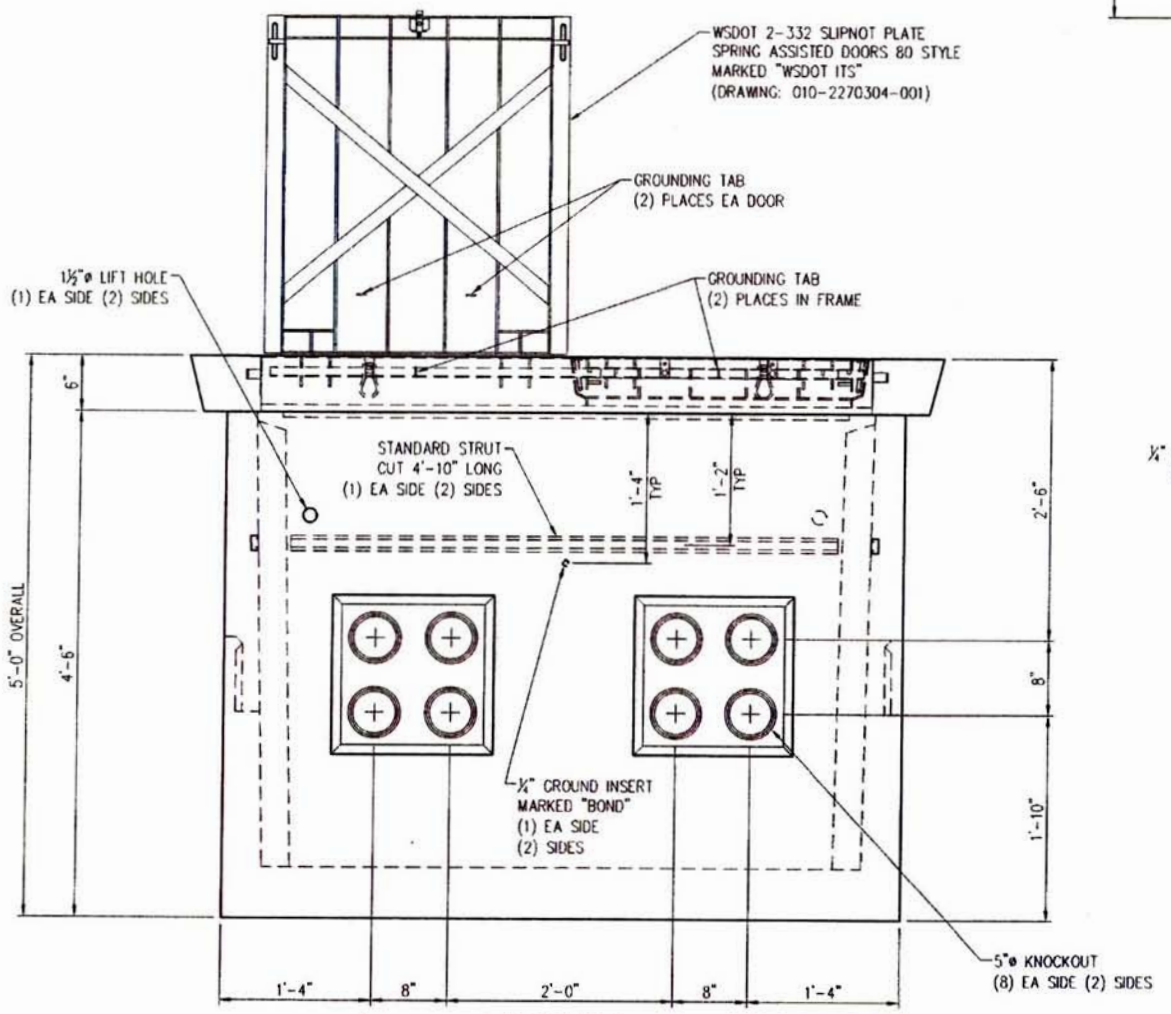

VIEW AA

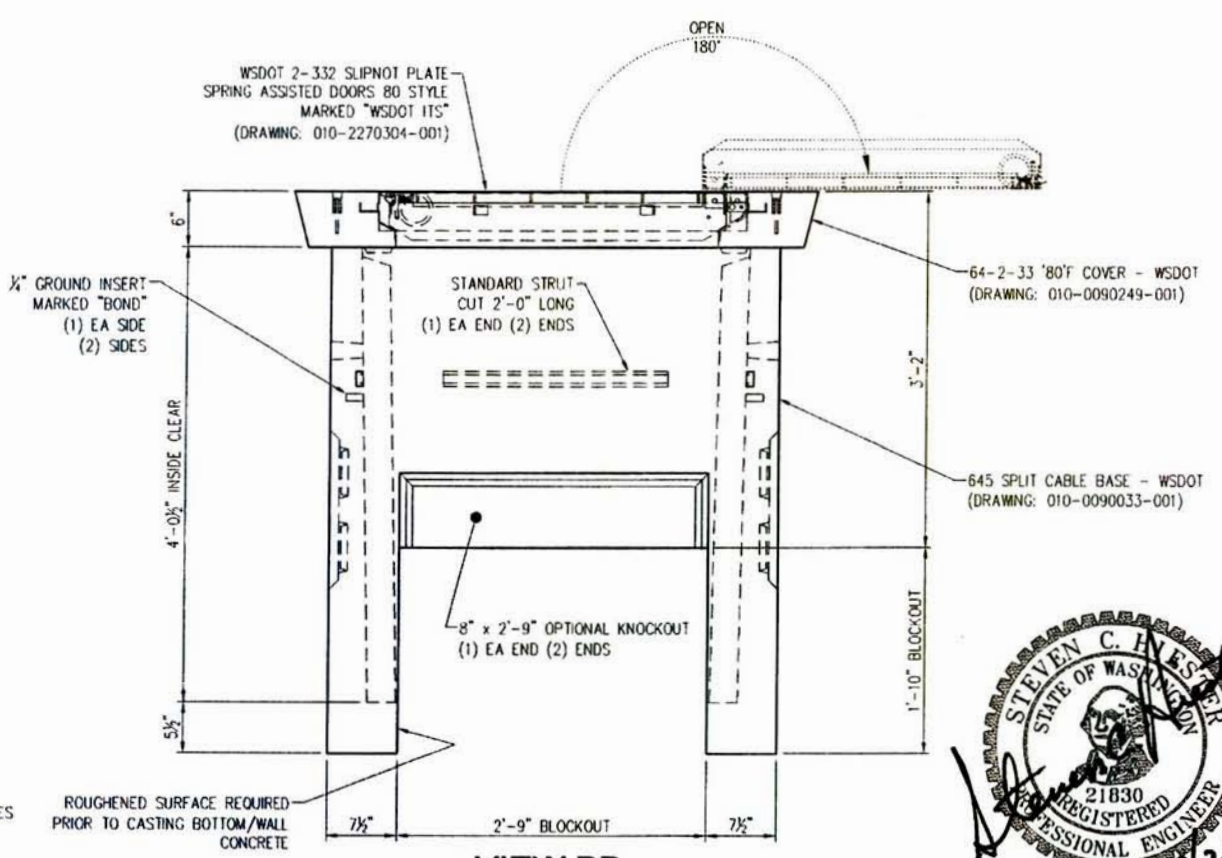

VIEW BB

STEVEN C. HESTER
STATE OF WASHINGTON
21830
REGISTERED
PROFESSIONAL ENGINEER
9/23/12

LTR.	REVISION	DATE	BY
G	CHANGED NAME OF COVER IN CALLOUT	9/8/11	CDR
-	(SEE CAD FILE FOR COMPLETE REVISION HISTORY)	-	-

THIS DOCUMENT IS THE PROPERTY OF OLDCASTLE PRECAST, INC. IT IS SUBMITTED FOR REFERENCE PURPOSES ONLY AND SHALL NOT BE USED IN ANY WAY DETRIMENTAL TO THE INTERESTS OF SAID COMPANY. COPYRIGHT © 2011 Oldcastle Precast, Inc. All Rights Reserved

SALES		DATE	4/6/10
DESIGNER	JG	WEIGHT	4,785 lbs
CHECKED		CALC NO	

Oldcastle Precast®
P.O. BOX 3595 AUBURN, WA 98071-0595
PHONE: 800-882-1538 FAX: 253-735-4201

645 STD DUTY SPLIT CABLE VAULT -WSDOT
645 VAULT: 5'-5.5"L x 3'-5.5"W x 4'-0.5"H (INSIDE)
CUSTOMER STANDARD PRODUCT

CUSTOMER	WASHINGTON STATE D.O.T.
DRAWING NUMBER	010-X806410-003
SHEET	1 OF 1
REVISION	G

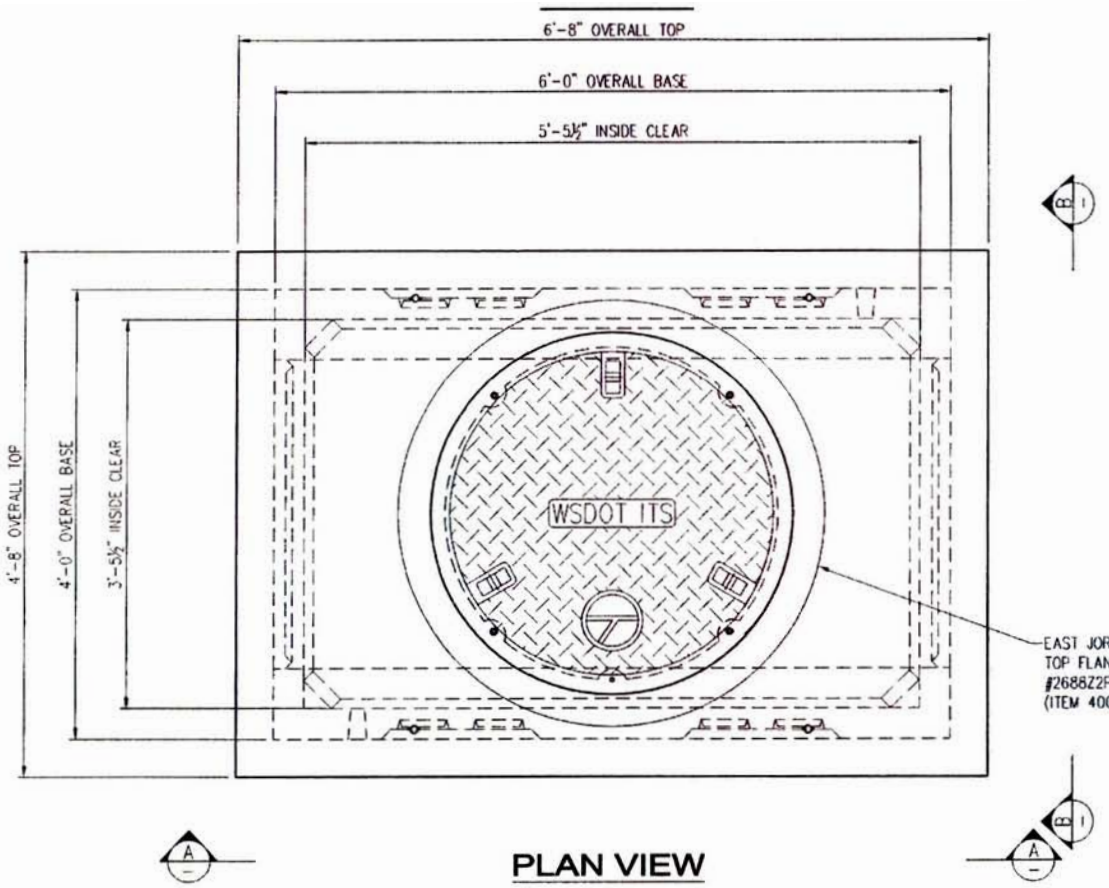

PLAN VIEW

NOTE:
PENTA HEAD BOLT IS RECESSED MINIMUM ⅛" BELOW PLATE SURFACE.

PENTA HEAD BOLT TO BE LIBERALLY COATED WITH ANTI-SEIZE COMPOUND.

APPROVED
Washington State
Department of Transportation
HQ Traffic Operations Office
DATE July 30, 2012 TAT

STRUCTURAL NOTES

1. CONCRETE: 28 DAY COMPRESSIVE STRENGTH f'c = 4000 psi
2. REBAR: ASTM A-615 GRADE 60
3. MESH: ASTM A-185 GRADE 65
4. DESIGN: ACI-318-05 BUILDING CODE
5. LOADS: HEAVY DUTY LOADING, 46,000 lbs
   ASTM C-857 "MINIMUM STRUCTURAL DESIGN LOADING FOR UNDERGROUND PRECAST CONCRETE UTILITY STRUCTURES"
   30% IMPACT FOR LESS THAN 2'-0" SOIL COVER
   SOIL DENSITY 120 pcf
   40 pcf E.F.P. LATERAL SOIL PRESSURE ABOVE WATERTABLE
   80 pcf E.F.P. LATERAL SOIL PRESSURE BELOW WATERTABLE
   230 psf LIVE LOAD SURCHARGE
   NO LIVE LOAD SURCHARGE FOR SOIL COVER > 8'-0"
   TOP OF VAULT AT FINISHED GRADE
   WATERTABLE 5'-0" BELOW FINISHED GRADE (ASSUMED)

GENERAL NOTES

1. CUSTOMER TO:
   VERIFY ALL VAULT FEATURES
   DO ALL GROUTING & EPOXY OF VAULTS, HOLES & SEAMS (USING NON-SHRINK GROUT)
   SUPPLY & INSTALL ALL PIPING & ELECTRICAL
   INSTALL ALL LADDERS
   DO ALL PAINTING

SHIPPING WEIGHT

64-36F HD COVER:	3,170 lbs
645 SPLIT CABLE BASE:	3,210 lbs
TOTAL:	6,380 lbs

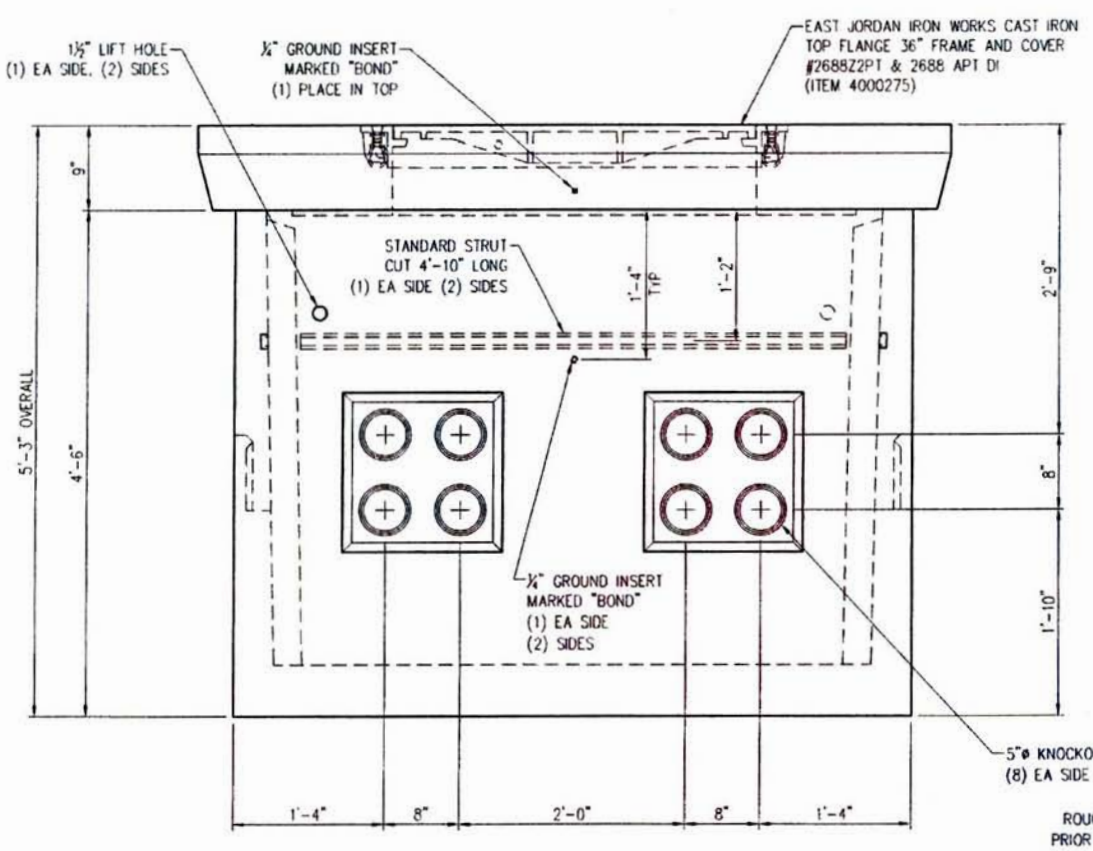

VIEW AA

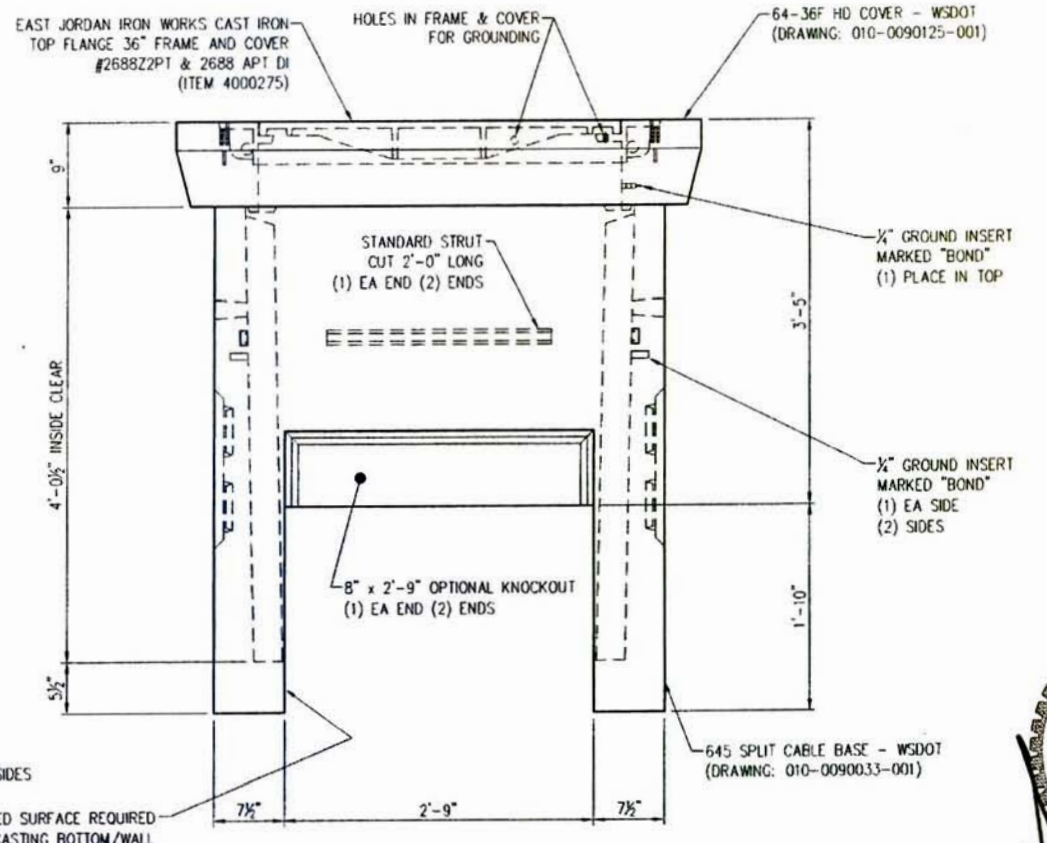

VIEW BB

STEVEN C. HESTER
STATE OF WASHINGTON
21830
REGISTERED
PROFESSIONAL ENGINEER
4/23/12

LTR.	REVISION	DATE	BY
E	CHANGED DRAWING NUMBER	10/17/11	MLF
-	(SEE CAD FILE FOR COMPLETE REVISION HISTORY)	-	-

THIS DOCUMENT IS THE PROPERTY OF OLDCASTLE PRECAST, INC. IT IS SUBMITTED FOR REFERENCE PURPOSES ONLY AND SHALL NOT BE USED IN ANY WAY INJURIOUS TO THE INTERESTS OF SAID COMPANY. COPYRIGHT © 2011 Oldcastle Precast, Inc. All Rights Reserved

SALES		DATE	4/6/10
DESIGNER	JG	WEIGHT	6,380 lbs
CHECKED		CALC NO	

Oldcastle Precast®
P.O. BOX 580 AUBURN, WA 98071-0580
PHONE: 800-992-1538 FAX: 253-735-4201

645 HVY DUTY SPLIT CABLE VAULT -WSDOT
645 VAULT: 5'-5.5"L x 3'-5.5"W x 4'-0.5"H (INSIDE)
CUSTOMER STANDARD PRODUCT

CUSTOMER: WASHINGTON STATE D.O.T.
SHEET: 1 OF 1
DRAWING NUMBER: 010-X806410-004
REVISION: E

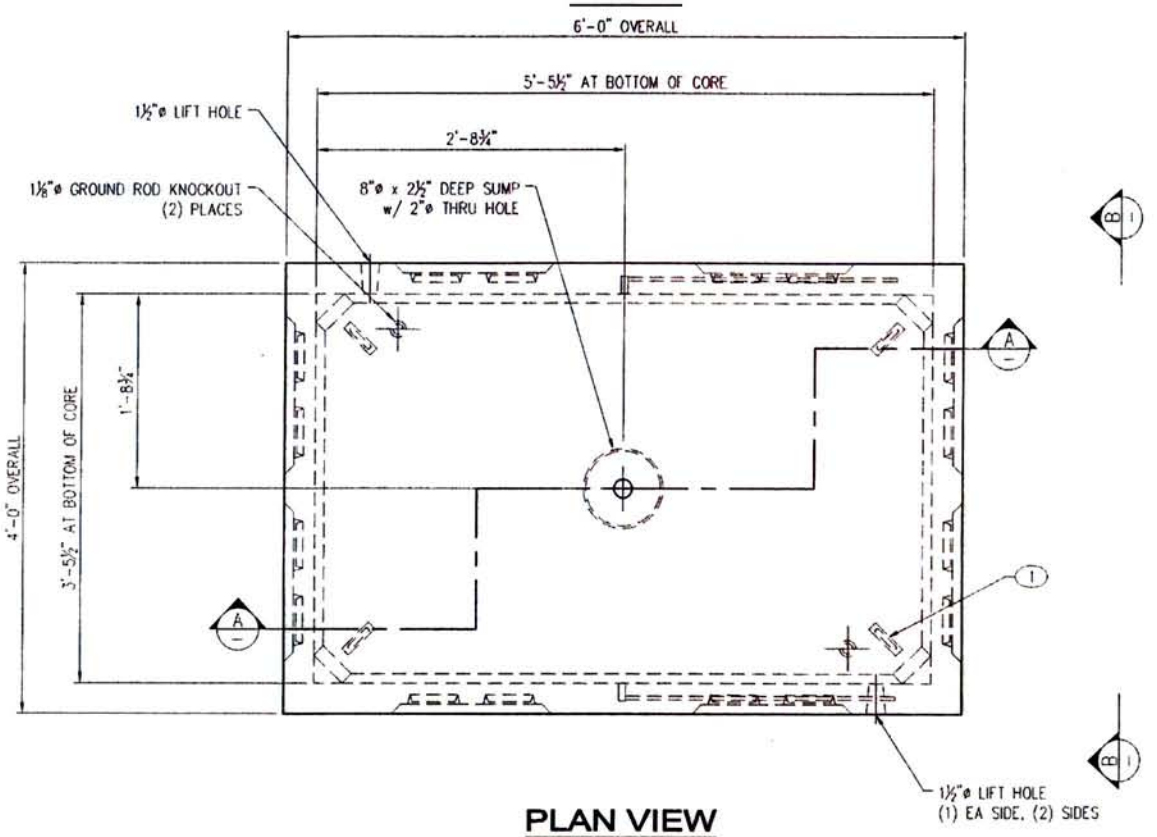

PLAN VIEW

LAYOUT (SHOWN AS POURED)

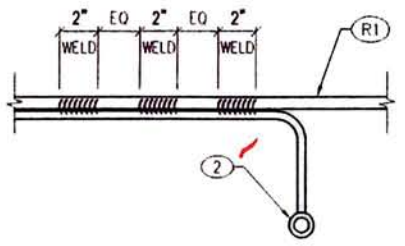

WELD DETAIL

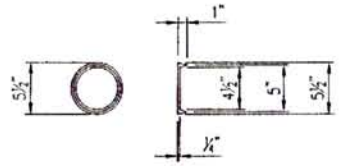

5"Ø KNOCKOUT

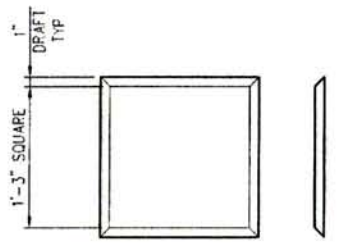

15"x 15"x 1" PAN

SHOP NOTES

1. USE "660 LA BASE w/645 PALLET" STEEL FORM
2. CONCRETE FINISH: FLAT FLOAT FINISH WITH MACHINED EDGES
3. FLIP MEATHOD: TRUNNION
4. FILL GROUND INSERT WITH GREASE & INSTALL CAP PROTECTOR
5. MARK GROUND INSERTS "BOND" IN 2" LETTERS WITH GREEN PAINT

BILL OF MATERIAL

PART	QTY	U/M	DESCRIPTION	ITEM #
1	4	ea	1/2" Pulling iron - Galv	010-5180140-001
2	2	ea	1/4" Ground w/ 3/16"x16" Rod- Brass	010-5100393-000
	13.67	ft	Strut 1 5/8"x13/16"-304SS (not stock)	010-5110060-000
	1.21	cu-yd	Concrete Mix - SCC	010-5010000-000
	2.81	bar	Rebar #4 X 40' GR60	010-5510030-000
	0.53	bar	Rebar #5 X 40' GR60	010-5510050-000
	85.00	sq-ft	Mesh - (Square Feet)	010-5500000-000

LAYOUT CUT LIST

PART	QTY	DESCRIPTION	SIZE
3	2	Strut 1 5/8"x13/16"-304SS	2'-0"
4	2	Strut 1 5/8"x13/16"-304SS	4'-10"

APPROVED
Washington State
Department of Transportation
HQ Traffic Operations Office
DATE July 30, 2012 TAT

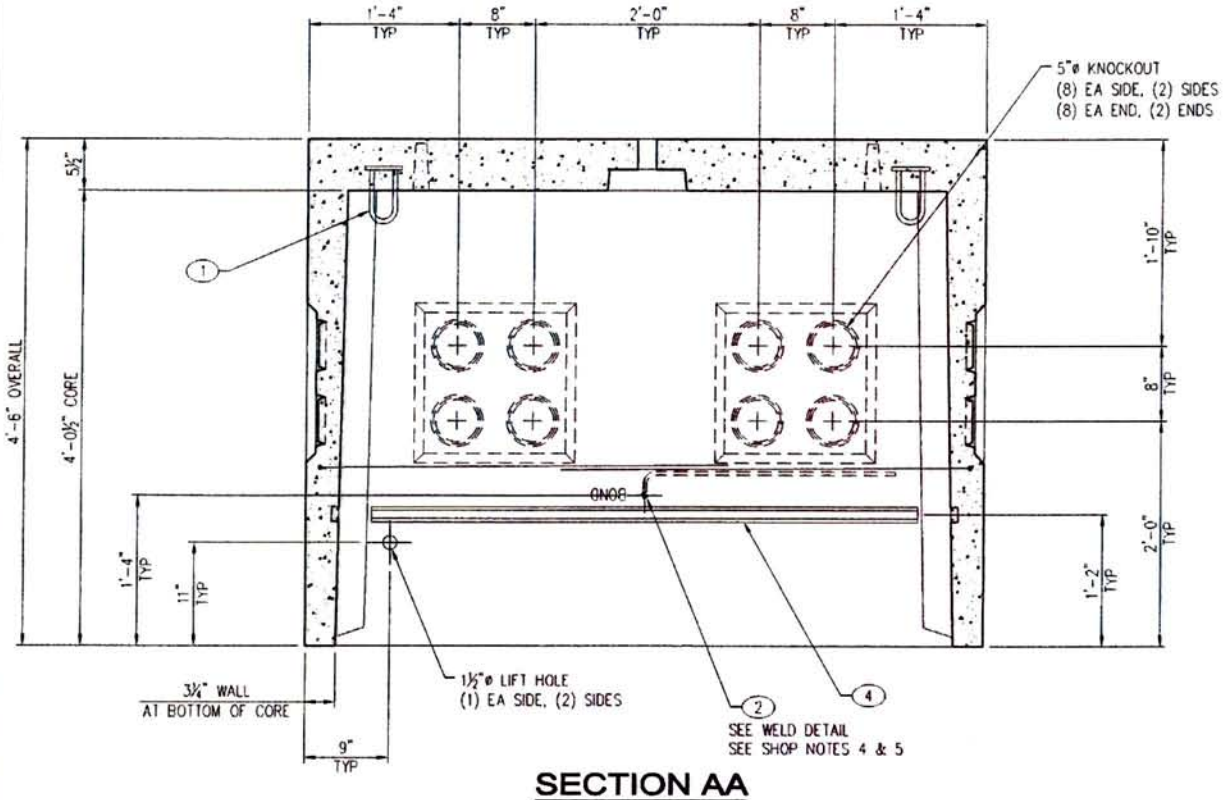

SECTION AA

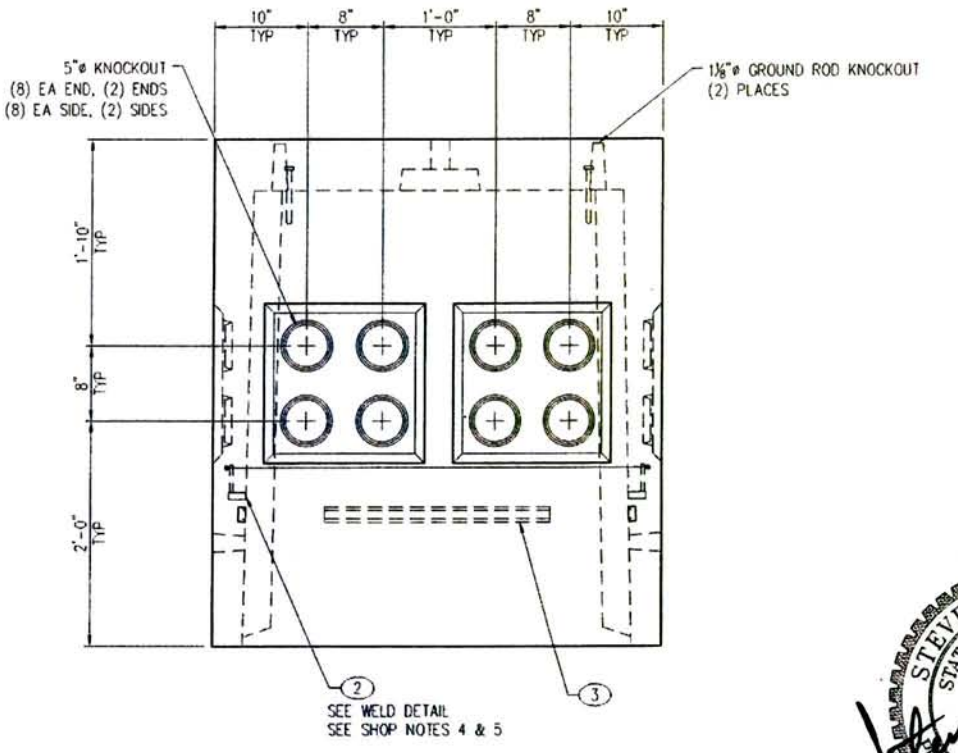

VIEW BB

STEVEN C. HEESTER
STATE OF WASHINGTON
21830
REGISTERED
PROFESSIONAL ENGINEER
7/23/12

LTR.	REVISION	DATE	BY
D	CHANGED DRAWING NUMBER	8/15/11	MLF
-	(SEE CAD FILE FOR COMPLETE REVISION HISTORY)	-	-

THIS DOCUMENT IS THE PROPERTY OF OLDCASTLE PRECAST, INC. IT IS SUBMITTED FOR REFERENCE PURPOSES ONLY AND SHALL NOT BE USED IN ANY WAY INJURIOUS TO THE INTERESTS OF SAID COMPANY. COPYRIGHT © 2011 Oldcastle Precast, Inc. All Rights Reserved

SALES		DATE	1/16/08
DESIGNER	WS	WEIGHT	4,770
CHECKED		CALC NO	

Oldcastle Precast®

645 CABLE BASE - WSDOT
LAYOUT DETAILS
CUSTOMER STANDARD PRODUCT

CUSTOMER: WASHINGTON STATE D.O.T.
SHEET: 1 of 2
DRAWING NUMBER: 010-0090032-001
REVISION: D

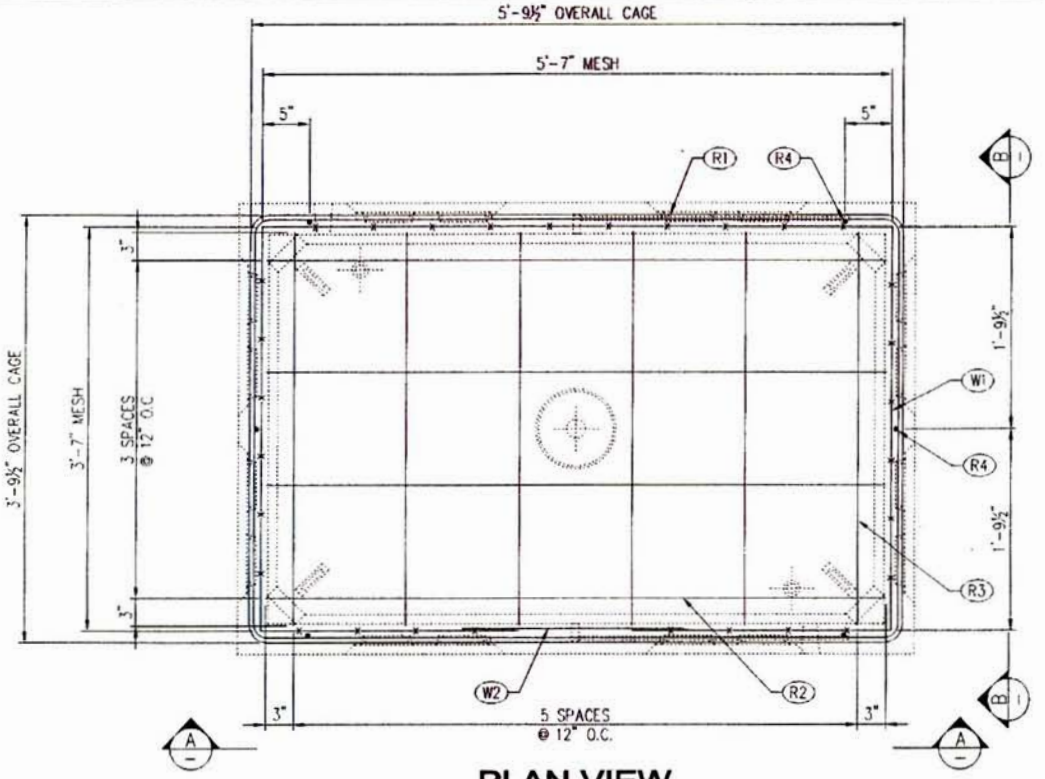

PLAN VIEW

REINFORCING (SHOWN AS POURED)

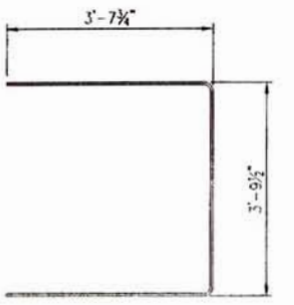

R1 DETAIL

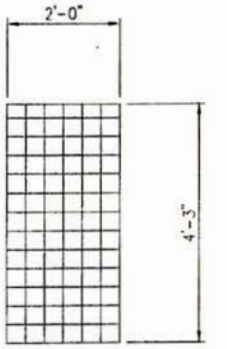

W2 DETAIL

REINFORCING CUT LIST					
PART	QTY	DESCRIPTION	FT	IN	SHAPE
R1	6	#4 Rebar	10	10	BENT
R2	4	#4 Rebar	5	6	STR
R3	6	#5 Rebar	3	6	STR
R4	6	#4 Rebar	4	3	STR
W1	1	Mesh 4x4 - W2.9 x W2.9			BENT
W2	1	Mesh 4x4 - W2.9 x W2.9			STR

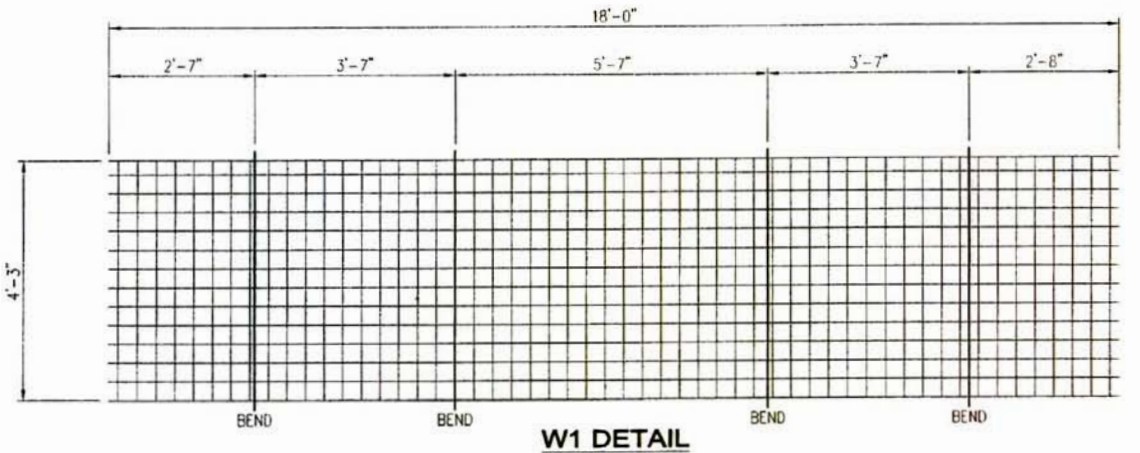

W1 DETAIL

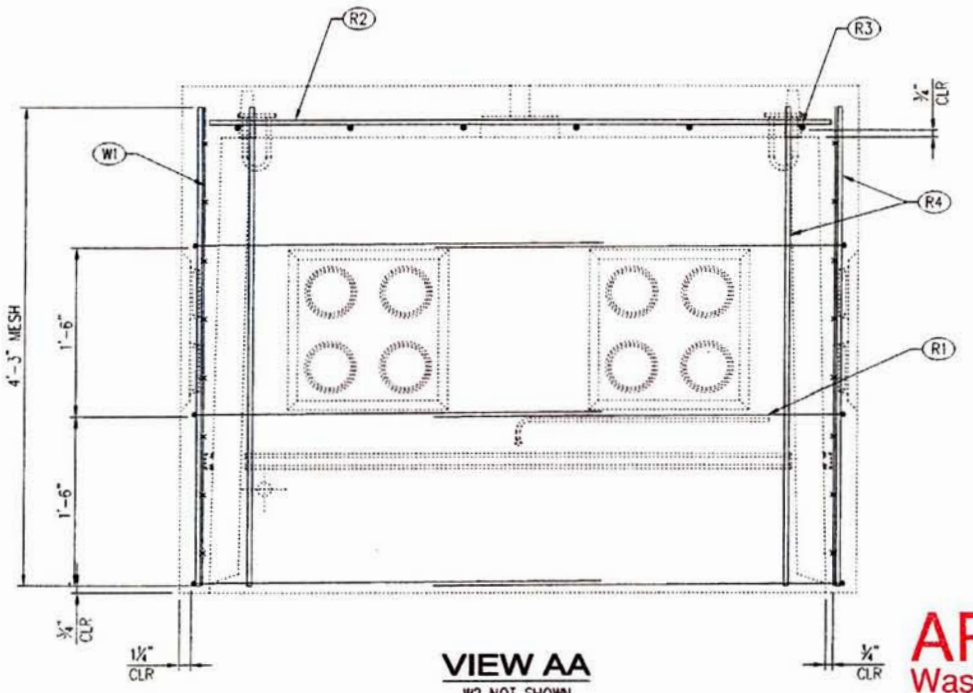

VIEW AA

W2 NOT SHOWN

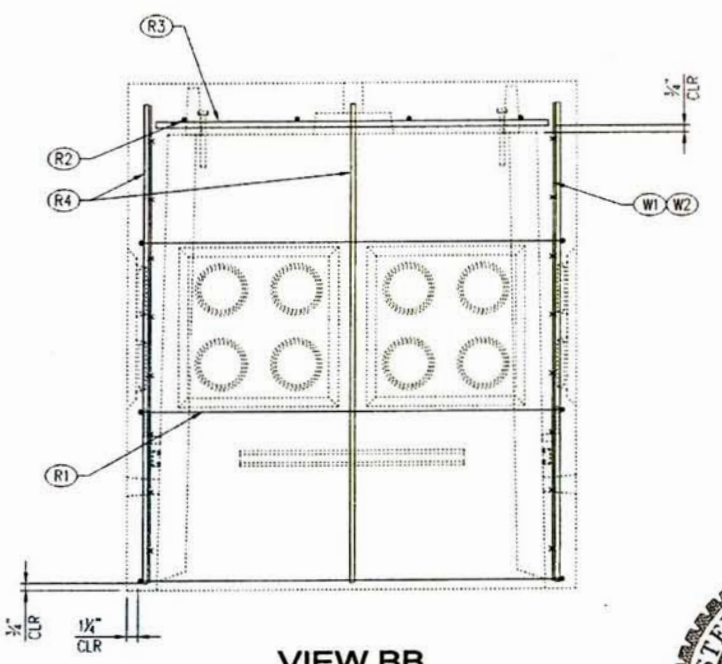

VIEW BB

APPROVED
Washington State
Department of Transportation
HQ Traffic Operations Office
DATE July 30, 2012 TAT

STEVEN C. HIESTER
STATE OF WASHINGTON
21830
REGISTERED
PROFESSIONAL ENGINEER
7/23/12

LTR	REVISION	DATE	BY
D	CHANGED DRAWING NUMBER	8/15/11	MLF
-	(SEE CAD FILE FOR COMPLETE REVISION HISTORY)	-	-

THIS DOCUMENT IS THE PROPERTY OF OLDCASTLE PRECAST, INC. IT IS SUBMITTED FOR REFERENCE PURPOSES ONLY AND SHALL NOT BE USED IN ANY WAY INJURIOUS TO THE INTERESTS OF SAID COMPANY. COPYRIGHT © 2011 Oldcastle Precast, Inc. All Rights Reserved

SALES		DATE	1/16/08
DESIGNER	WS	WEIGHT	
CHECKED		CALC NO	

Oldcastle Precast®

645 CABLE BASE - WSDOT
REINFORCING DETAILS
CUSTOMER STANDARD PRODUCT

CUSTOMER	WASHINGTON STATE D.O.T.	SHEET	2 OF 2
DRAWING NUMBER	010-0090032-001	REVISION	D

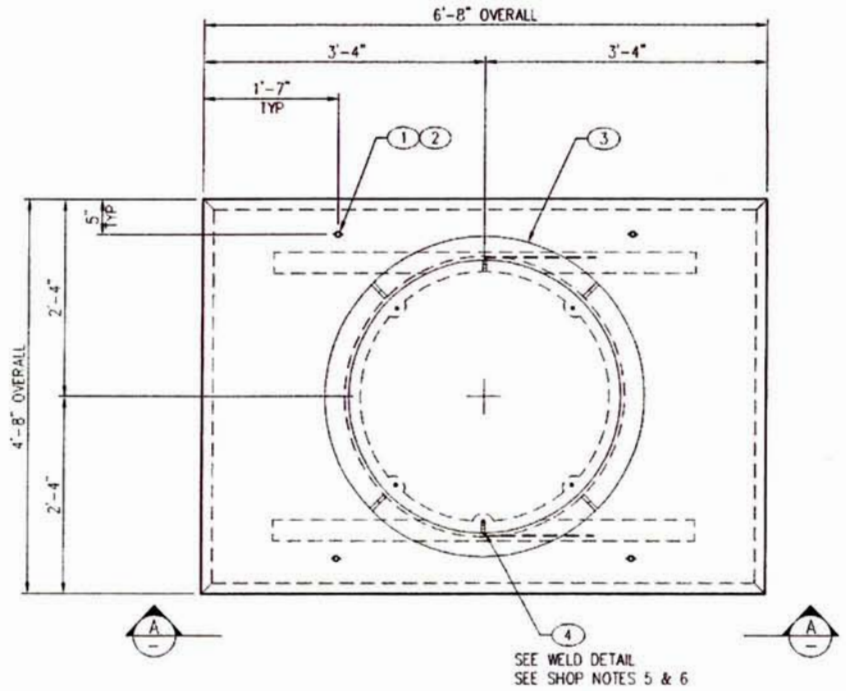

PLAN VIEW
LAYOUT (SHOWN AS POURED)

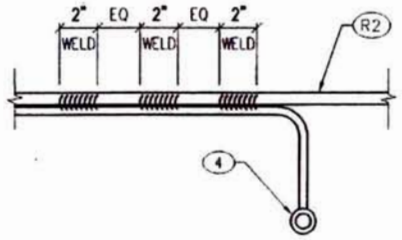

WELD DETAIL

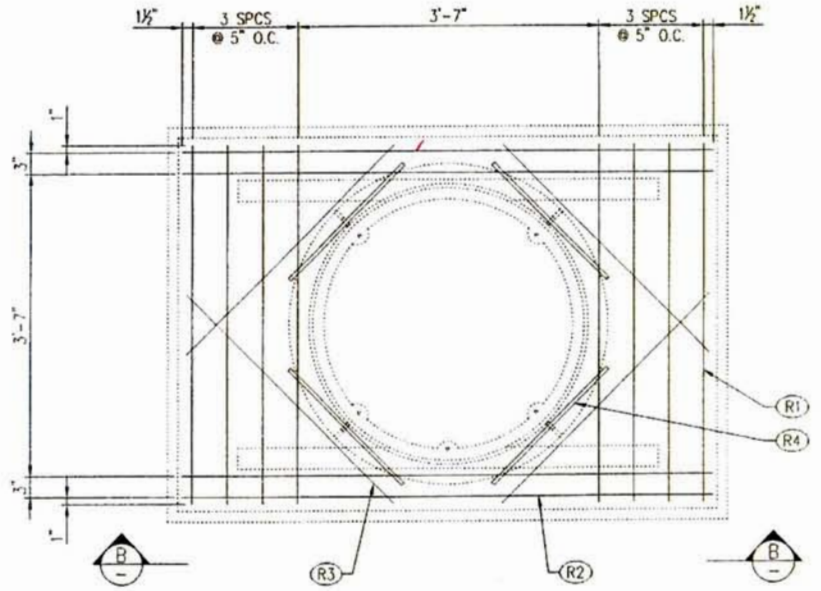

PLAN VIEW
REINFORCING (SHOWN AS POURED)

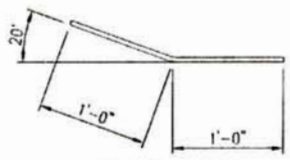

R4 DETAIL
SEE NOTE 4

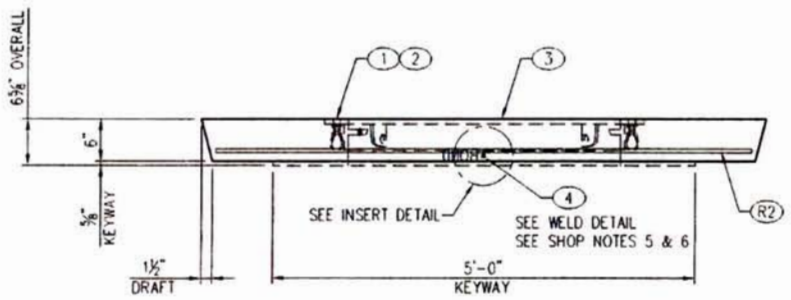

VIEW AA

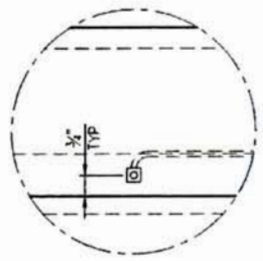

INSERT DETAIL

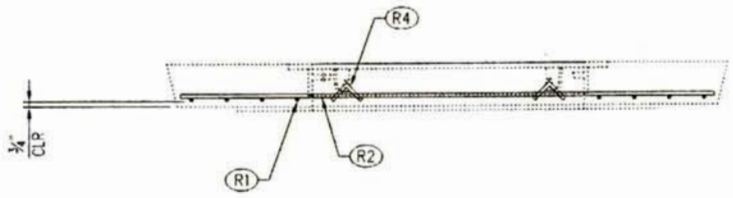

VIEW BB
R3 NOT SHOWN

APPROVED
Washington State
Department of Transportation
HQ Traffic Operations Office
DATE July 30, 2012 TAT

BILL OF MATERIAL

PART	QTY	U/M	DESCRIPTION	ITEM #
1	4	ea	Insert Loop Ferr 3/4"	010-5100100-000
2	4	ea	Insert Plastic Plug 3/4" 'UV'	010-5100050-000
3	1	ea	36" x 4" Fing Up - "WSDOT ITS"	010-4000275-001
4	2	ea	1/4" Ground w/ 3/16"x16" Rod- Brass	010-5100393-000
	0.42	cu-yd	Concrete Mix - SCC	010-5010000-000
	2.07	bar	Rebar #4 X 40' GR60	010-5510030-000
	20.00		Wood & Steel Forming Charge	010-9300050-000

SHOP NOTES

1. USE "64 COVER" STEEL FORM
2. CONCRETE FINISH: BROOM FINISH WITH MACHINED EDGES
3. EAST JORDAN IRON WORKS (EJIW) # 00268819 TAPPED FOR GROUNDING
4. PASS (R4) THROUGH HOLE IN FRAME EAR AND TIE TO (R1) OR (R2)
5. FILL GROUND INSERT WITH GREASE & INSTALL CAP PROTECTOR
6. MARK GROUND INSERTS "BOND" IN 2" LETTERS WITH GREEN PAINT

REINFORCING CUT LIST

PART	QTY	DESCRIPTION	FT	IN	SHAPE
R1	8	#4 Rebar	4	3	STR
R2	4	#4 Rebar	6	4	STR
R3	4	#4 Rebar	3	6	STR
R4	4	#4 Rebar	2	0	BENT

STEVEN C. HIESTER
STATE OF WASHINGTON
21630
REGISTERED
PROFESSIONAL ENGINEER
7/23/12

LTR.	REVISION	DATE	BY
-	(SEE CAD FILE FOR COMPLETE REVISION HISTORY)	-	-

THIS DOCUMENT IS THE PROPERTY OF OLDCASTLE PRECAST, INC. IT IS SUBMITTED FOR REFERENCE PURPOSES ONLY AND SHALL NOT BE USED IN ANY WAY DETRIMENTAL TO THE INTERESTS OF SAID COMPANY. COPYRIGHT © 2011 Oldcastle Precast, Inc. All Rights Reserved

SALES		DATE	4/11/10
DESIGNER	JG	WEIGHT	2,300 lbs
CHECKED		CALC NO	

Oldcastle Precast®
P.O. BOX 580 AUBURN, WA 98071-0580
PHONE: 800-882-1538 FAX: 253-735-4201

64-36F HD COVER REPL. - WSDOT
LAYOUT & REINFORCING DETAILS
CUSTOMER STANDARD PRODUCT

CUSTOMER	WAHINGTON STATE D.O.T.
DRAWING NUMBER	010-0090127-001
SHEET	1 of 1
REVISION	

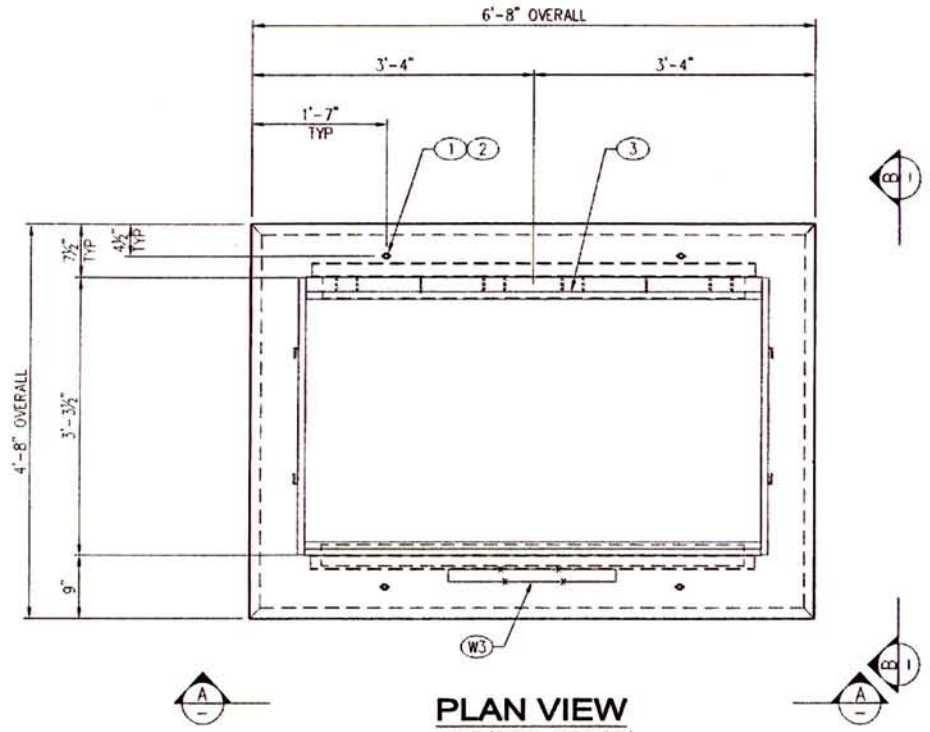

PLAN VIEW
LAYOUT (SHOWN AS POURED)

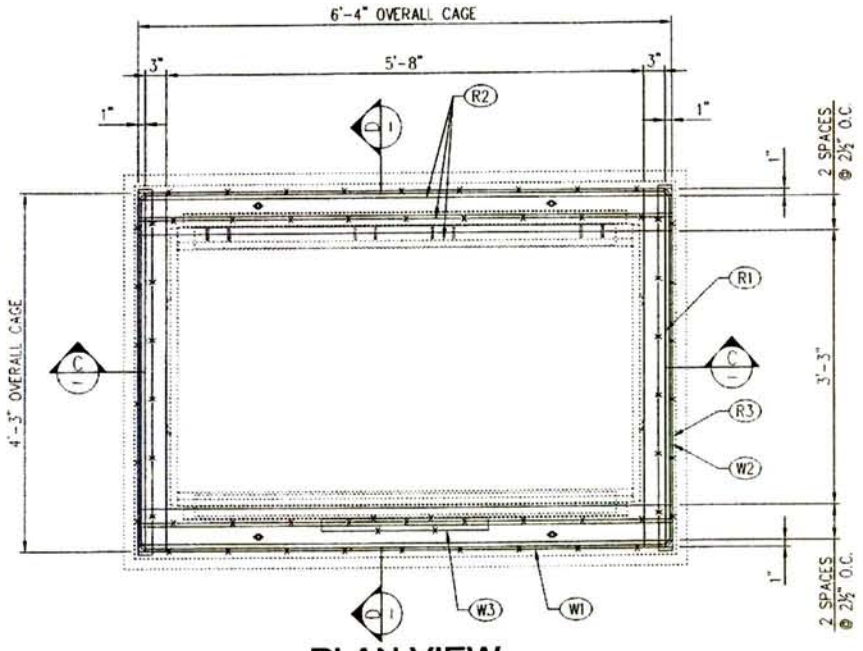

PLAN VIEW
REINFORCING (SHOWN AS POURED)

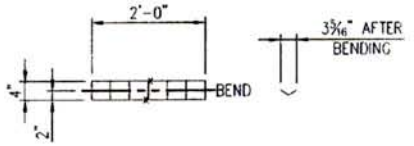

W3 DETAIL

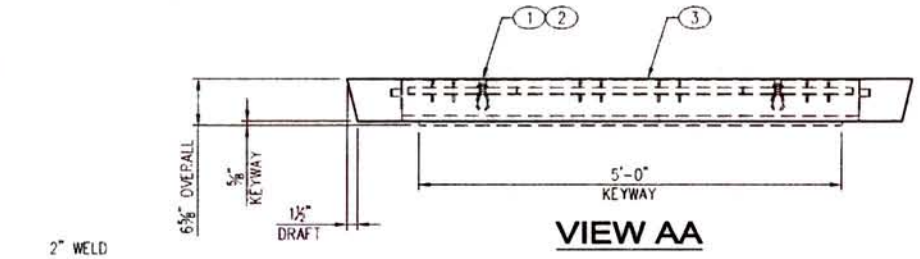

VIEW AA

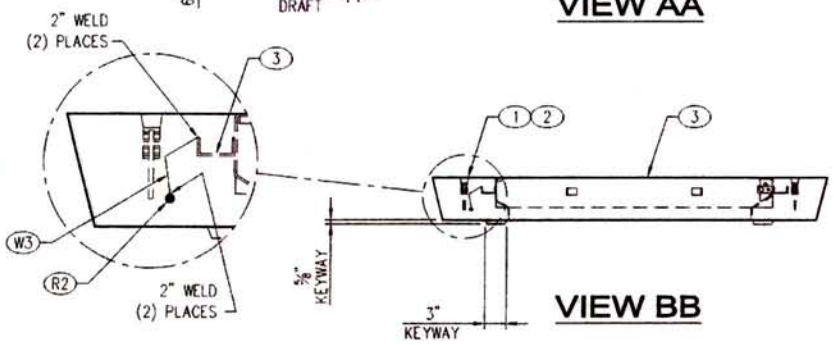

VIEW BB

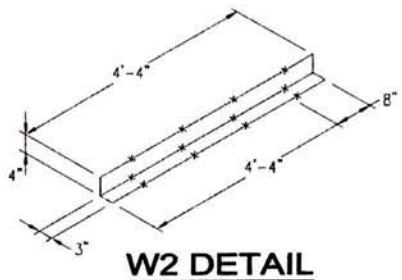

W2 DETAIL

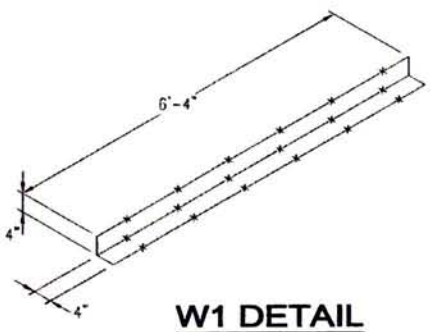

W1 DETAIL

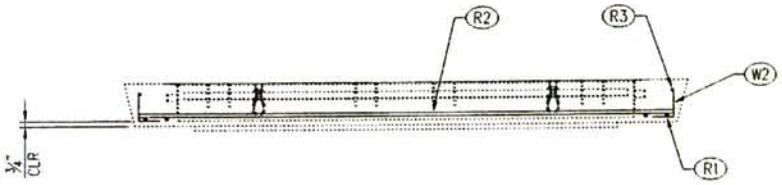

SECTION CC
W1 & W3 NOT SHOWN

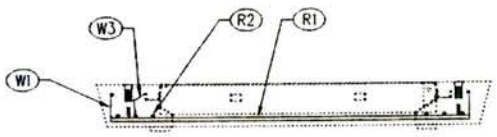

SECTION DD
W2 NOT SHOWN

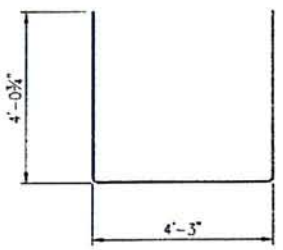

R3 DETAIL

BILL OF MATERIAL				
PART	QTY	U/M	DESCRIPTION	ITEM #
1	4	ea	Insert Loop Ferr 3/4"	010-5100100-000
2	4	ea	Insert Plastic Plug 3/4" 'UV'	010-5100050-000
3	1	ea	2-332-SA-80 Frame - WSDOT	010-2270045-001
	18.00	ft	Conseal 3/4" CS-101	010-5130005-000
	0.24	cu-yd	Concrete Mix - SCC	010-5010000-000
	0.61	bar	Rebar #3 X 40' A706/GR60	010-5510010-000
	1.38	bar	Rebar #4 X 40' A706/GR60	010-5510030-000
	14.16	sq-ft	Mesh - (Square Feet)	010-5500000-000

SHOP NOTES

1. USE STEEL FORM "64 COVER"
2. CONCRETE FINISH: BROOM FINISH WITH MACHINED EDGES

REINFORCING CUT LIST					
PART	QTY	DESCRIPTION	FT	IN	SHAPE
R1	4	#4 Rebar	4	3	STR
R2	6	#4 Rebar	6	4	STR
R3	2	#3 Rebar	12	2	BENT
W1	2	Mesh 4x4 - W2.9 x W2.9			BENT
W2	2	Mesh 4x4 - W2.9 x W2.9			BENT
W3	1	Mesh 4x4 - W2.9 x W2.9			BENT

APPROVED
Washington State
Department of Transportation
HQ Traffic Operations Office
DATE July 30, 2012

STEVEN C. HINESTER
STATE OF WASHINGTON
21830
REGISTERED
PROFESSIONAL ENGINEER
7/23/12

LTR.	REVISION	DATE	BY
D	CORRECTED SPLICE LENGTH	2/3/12	CLP
-	(SEE CAD FILE FOR COMPLETE REVISION HISTORY)	-	-

THIS DOCUMENT IS THE PROPERTY OF OLDCASTLE PRECAST, INC. IT IS SUBMITTED FOR REFERENCE PURPOSES ONLY AND SHALL NOT BE USED IN ANY WAY INJURIOUS TO THE INTERESTS OF SAID COMPANY COPYRIGHT © 2010 Oldcastle Precast, Inc. All Rights Reserved

SALES		DATE	4/3/10
DESIGNER	JC	WEIGHT	1,075 lbs
CHECKED		CALC NO	

Oldcastle Precast®
P.O. BOX 888 AUBURN, WA 98071-0888
PHONE: 800-562-1636 FAX: 253-735-4384

64-2-33 '80' F COVER - WSDOT
LAYOUT & REINFORCING DETAILS
CUSTOMER STANDARD PRODUCT

CUSTOMER: WASHINGTON STATE D.O.T.
DRAWING NUMBER: 010-0090249-001
SHEET: 1 of 1
REVISION: D

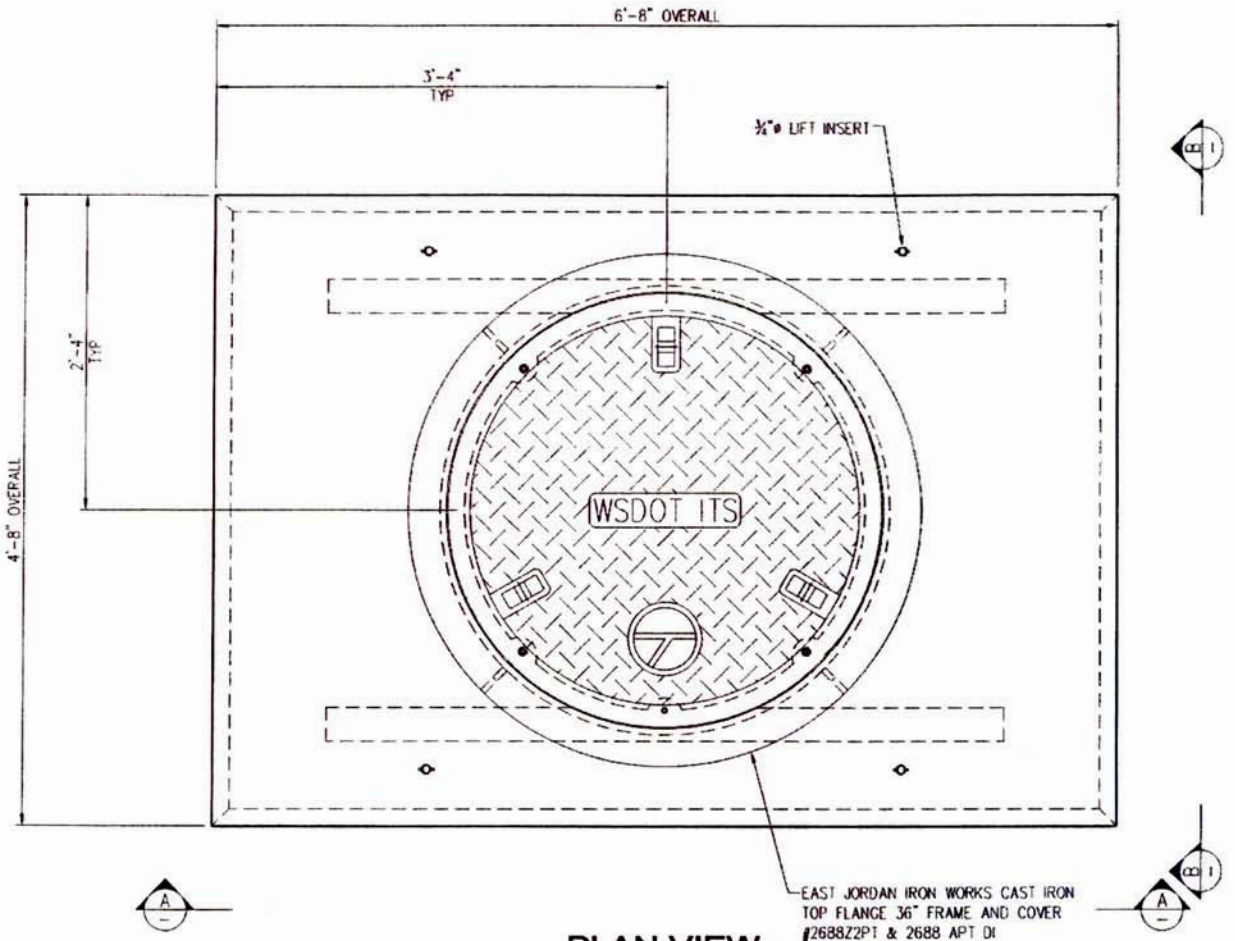

PLAN VIEW
LAYOUT (SHOWN AS POURED)

NOTE:

PENTA HEAD BOLT IS RECESSED MINIMUM ⅛" BELOW PLATE SURFACE.

PENTA HEAD BOLT TO BE LIBERALLY COATED WITH ANTI-SEIZE COMPOUND.

STRUCTURAL NOTES

1. CONCRETE: 28 DAY COMPRESSIVE STRENGTH f'c = 4,000 psi
2. REBAR: ASTM A-615 GRADE 60
3. MESH: ASTM A-185 GRADE 65
4. DESIGN: ACI-318-05 BUILDING CODE
5. LOADS: WHEEL LOAD = 46,000 lbs
   ASTM C-857 "MINIMUM STRUCTURAL DESIGN LOADING FOR UNDERGROUND PRECAST CONCRETE UTILITY STRUCTURES"
   30% IMPACT FOR LESS THAN 2'-0" SOIL COVER
   TOP OF VAULT AT FINISHED GRADE

GENERAL NOTES

1. CUSTOMER TO:
   VERIFY ALL FEATURES
   DO ALL GROUTING & EPOXY OF VAULTS, HOLES & SEAMS (USING NON-SHRINK GROUT)
   SUPPLY & INSTALL ALL PIPING & ELECTRICAL
   INSTALL ALL LADDERS
   DO ALL PAINTING

NOTE

USE THIS COVER TO CONVERT AN EXISTING STANDARD DUTY CABLE VAULT INTO A HEAVY DUTY CABLE VAULT.

APPROVED
Washington State
Department of Transportation
HQ Traffic Operations Office
DATE July 30, 2012 TAT

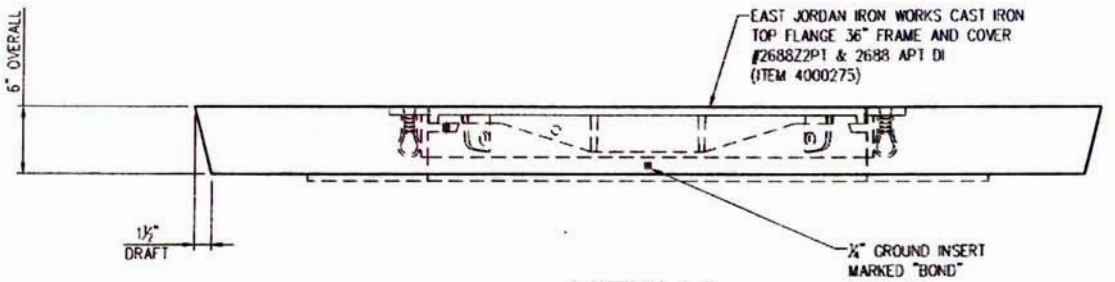

VIEW AA

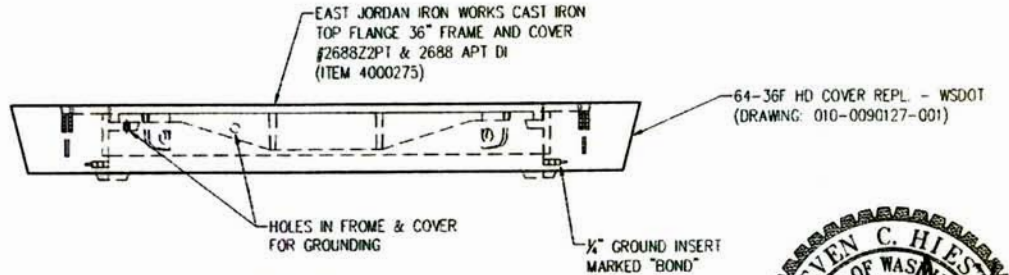

VIEW BB

STEVEN C. HIESTER
STATE OF WASHINGTON
21830
REGISTERED
PROFESSIONAL ENGINEER
7/23/12

LTR.	REVISION	DATE	BY
D	REMOVED SHEET 2	8/15/11	MLF
-	(SEE CAD FILE FOR COMPLETE REVISION HISTORY)	-	-

THIS DOCUMENT IS THE PROPERTY OF OLDCASTLE PRECAST, INC. IT IS SUBMITTED FOR REFERENCE PURPOSES ONLY AND SHALL NOT BE USED IN ANY WAY DETRIMENTAL TO THE INTERESTS OF SAID COMPANY. COPYRIGHT © 2011 Oldcastle Precast, Inc. All Rights Reserved

SALES		DATE	4/11/10
DESIGNER	JG	WEIGHT	2,300 lbs
CHECKED		CALC NO	

Oldcastle Precast®
P.O. BOX 5188 AUBURN, WA 98071-5188
PHONE: 800-882-1538 FAX: 253-735-4184

64-36F HEAVY DUTY REPL. COVER - WSDOT

CUSTOMER STANDARD PRODUCT

CUSTOMER	WAHINGTON STATE D.O.T.
SHEET	1 OF 1
DRAWING NUMBER	010-X806404-001
REVISION	D

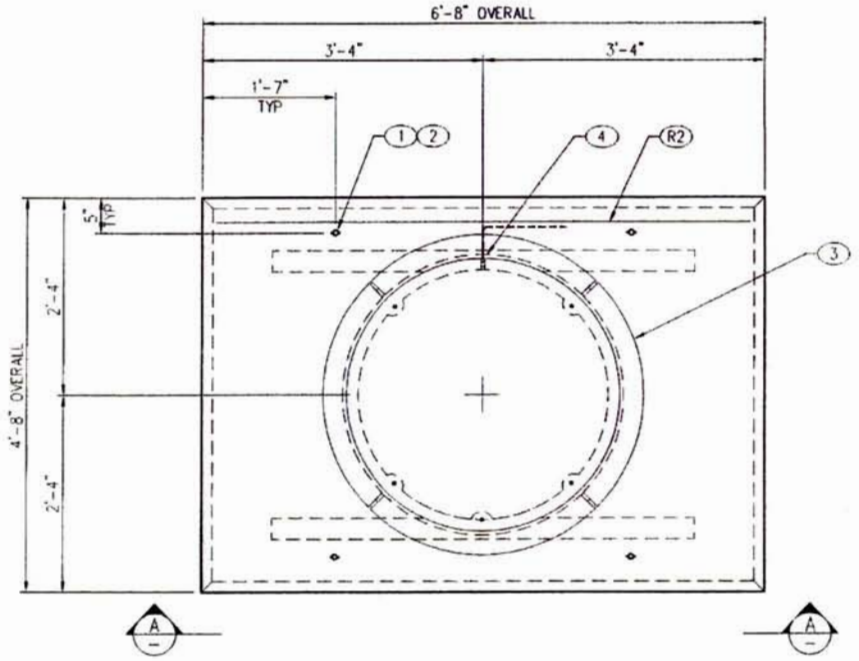

PLAN VIEW
LAYOUT (SHOWN AS POURED)

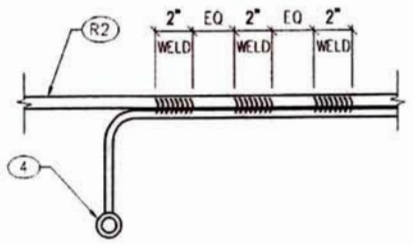

WELD DETAIL

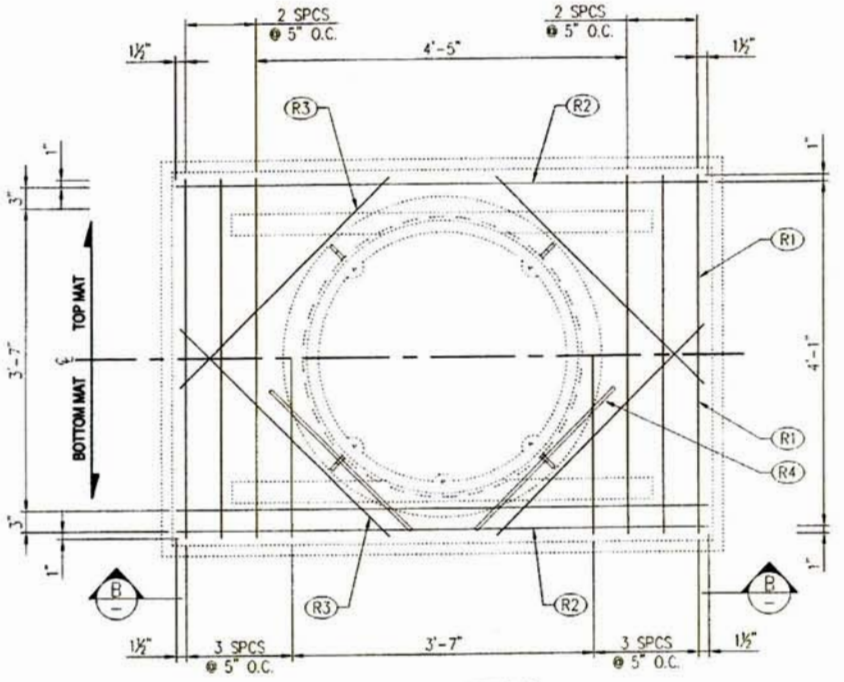

PLAN VIEW
REINFORCING (SHOWN AS POURED)

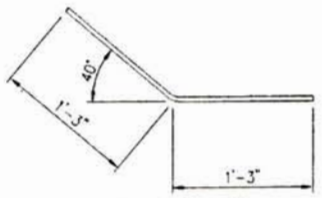

R4 DETAIL
SEE NOTE 5

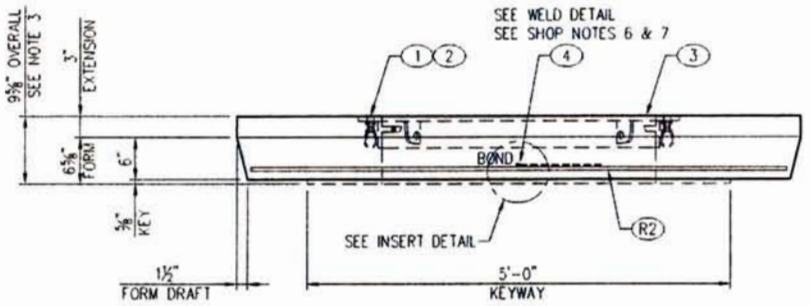

VIEW AA

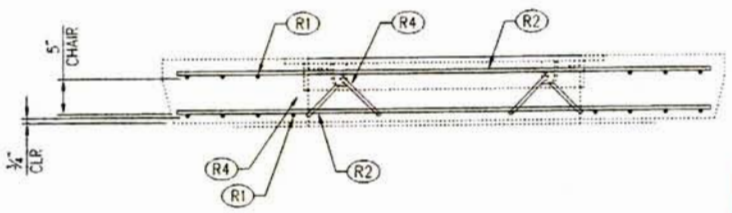

VIEW BB
R3 NOT SHOWN

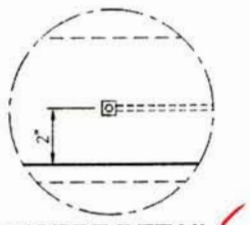

INSERT DETAIL

BILL OF MATERIAL				
PART	QTY	U/M	DESCRIPTION	ITEM #
1	4	ea	Insert Loop Ferr 3/4"	010-5100100-000
2	4	ea	Insert Plastic Plug 3/4" 'UV'	010-5100050-000
3	1	ea	36" x 4" Flng Up - "WSDOT ITS"	010-4000275-001
4	1	ea	1/4" Ground w/ 3/16"x16" Rod- Brass	010-5100393-000
	0.63	cu-yd	Concrete Mix - SCC	010-5010000-000
	3.40	bar	Rebar #4 X 40' GR60	010-5510030-000
	20.00		Wood & Steel Forming Charge	010-9300050-000

SHOP NOTES

1. USE "64 COVER" STEEL FORM
2. CONCRETE FINISH: BROOM FINISH WITH MACHINED EDGES
3. ADD 3" TO SLAB
4. EAST JORDAN IRON WORKS (EJIW) # 00268819 TAPPED FOR GROUNDING
5. PLACE THROUGH HOLE IN FRAME EAR AND TIE TO (R1) OR (R2)
6. FILL GROUND INSERT WITH GREASE & INSTALL CAP PROTECTOR
7. MARK GROUND INSERTS "BOND" IN 2" LETTERS WITH GREEN PAINT

REINFORCING CUT LIST					
PART	QTY	DESCRIPTION	FT	IN	SHAPE
R1	14	#4 Rebar	4	3	STR
R2	6	#4 Rebar	6	4	STR
R3	8	#4 Rebar	3	6	STR
R4	4	#4 Rebar	2	6	BENT

APPROVED
Washington State
Department of Transportation
HQ Traffic Operations Office
DATE July 30, 2012 TAT

STEVEN C. HIESTER
STATE OF WASHINGTON
21830
REGISTERED
PROFESSIONAL ENGINEER
7/23/12

LTR	REVISION	DATE	BY
B	CHANGED DRAWING NUMBER, BOM ITEM 3	8/15/11	MLF
-	(SEE CAD FILE FOR COMPLETE REVISION HISTORY)	-	-

THIS DOCUMENT IS THE PROPERTY OF OLDCASTLE PRECAST, INC. IT IS SUBMITTED FOR REFERENCE PURPOSES ONLY AND SHALL NOT BE USED IN ANY WAY INJURIOUS TO THE INTERESTS OF SAID COMPANY. COPYRIGHT © 2011 Oldcastle Precast, Inc. All Rights Reserved

SALES		DATE	4/3/10
DESIGNER	JG	WEIGHT	3,170 lbs
CHECKED		CALC NO	

Oldcastle Precast®
P.O. BOX 886 AUBURN, WA 98071-0886
PHONE: 800-882-1638 FAX: 253-735-4281

64-36F HD COVER - WSDOT
LAYOUT & REINFORCING DETAILS
CUSTOMER STANDARD PRODUCT

CUSTOMER: WAHINGTON STATE D.O.T.
DRAWING NUMBER: 010-0090125-001
SHEET: 1 OF 1
REVISION: B

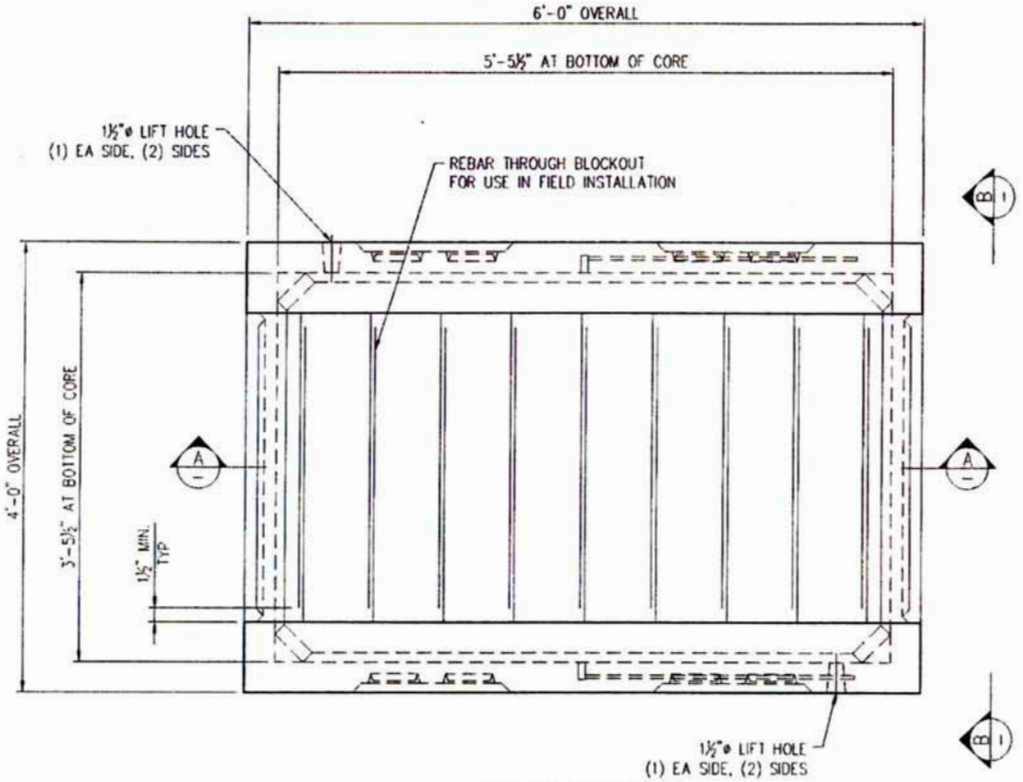

PLAN VIEW

LAYOUT (SHOWN AS POURED)

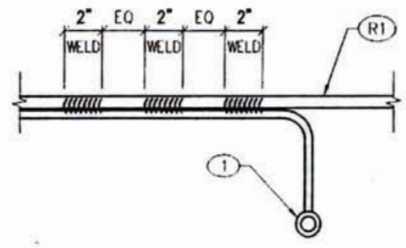

WELD DETAIL

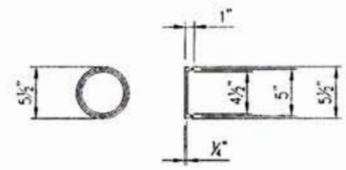

5"Ø KNOCKOUT

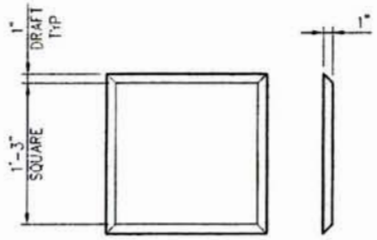

15" x 15" x 1" PAN

SHOP NOTES

1. USE "660 LA BASE w/645 PALLET" STEEL FORM
2. CONCRETE FINISH: FLAT FLOAT FINISH WITH MACHINED EDGES
3. FLIP MEATHOD: TRUNNION
4. FILL GROUND INSERT WITH GREASE & INSTALL CAP PROTECTOR
5. MARK GROUND INSERTS "BOND" IN 2" LETTERS WITH GREEN PAINT

BILL OF MATERIAL

PART	QTY	U/M	DESCRIPTION	ITEM #
1	2	ea	1/4" Ground w/ 3/16"x16" Rod- Brass	010-5100393-000
	13.67	ft	Strut 1 5/8"x13/16"-304SS (not stock)	010-5110060-000
	0.82	cu-yd	Concrete Mix - SCC	010-5010000-000
	6.13	bar	Rebar #3 X 40' GR60	010-5510010-000
	110.34	sq-ft	Mesh - (Square Feet)	010-5500000-000
	50		Wood & Steel Forming Charge	010-9300050-000

LAYOUT CUT LIST

PART	QTY	DESCRIPTION	SIZE
2	2	Strut 1 5/8"x13/16"-304SS	2'-0"
3	2	Strut 1 5/8"x13/16"-304SS	4'-10"

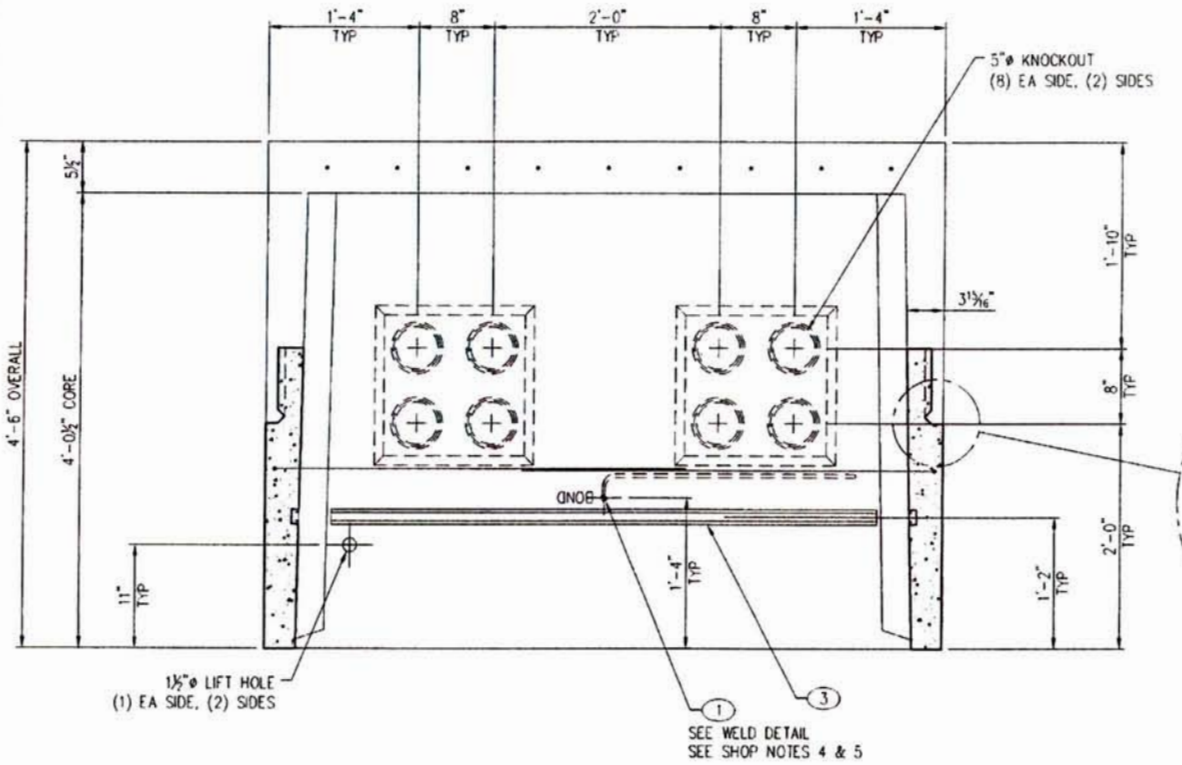

SECTION AA

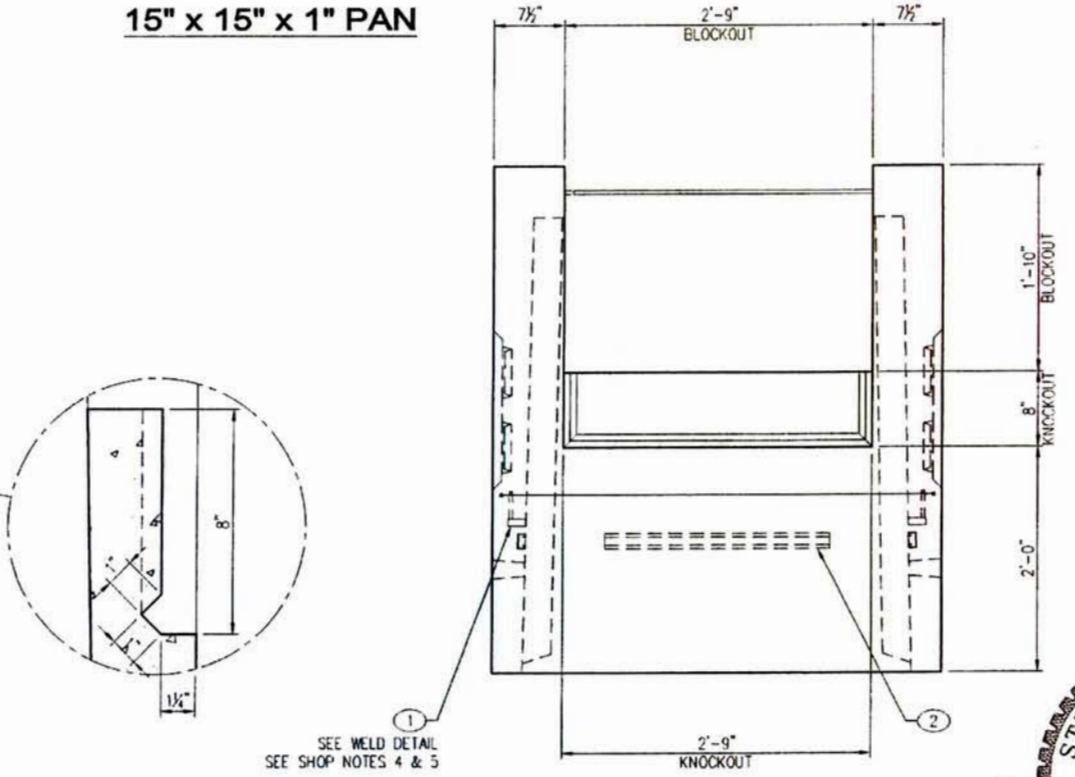

VIEW BB

APPROVED
Washington State
Department of Transportation
HQ Traffic Operations Office
DATE July 30, 2012 TAT

STEVEN C. HIESTER
STATE OF WASHINGTON
21830
REGISTERED
PROFESSIONAL ENGINEER
7/23/12

LTR.	REVISION	DATE	BY
D	CHANGED DRAWING NUMBER	8/15/11	MLF
-	(SEE CAD FILE FOR COMPLETE REVISION HISTORY)	-	-

THIS DOCUMENT IS THE PROPERTY OF OLDCASTLE PRECAST, INC. IT IS SUBMITTED FOR REFERENCE PURPOSES ONLY AND SHALL NOT BE USED IN ANY WAY INJURIOUS TO THE INTERESTS OF SAID COMPANY. COPYRIGHT © 2011 Oldcastle Precast, Inc. All Rights Reserved

SALES		DATE	4/29/10
DESIGNER	JC	WEIGHT	3,210 lbs
CHECKED		CALC NO	

Oldcastle Precast®
P.O. BOX 898 AUBURN, WA 98071-0898
PHONE: 800-562-1636 FAX: 253-735-4201

645 SPLIT CABLE BASE - WSDOT
LAYOUT DETAILS
CUSTOMER STANDARD PRODUCT

CUSTOMER: WASHINGTON STATE D.O.T.
DRAWING NUMBER: 010-0090033-001
SHEET: 1 of 2
REVISION: D

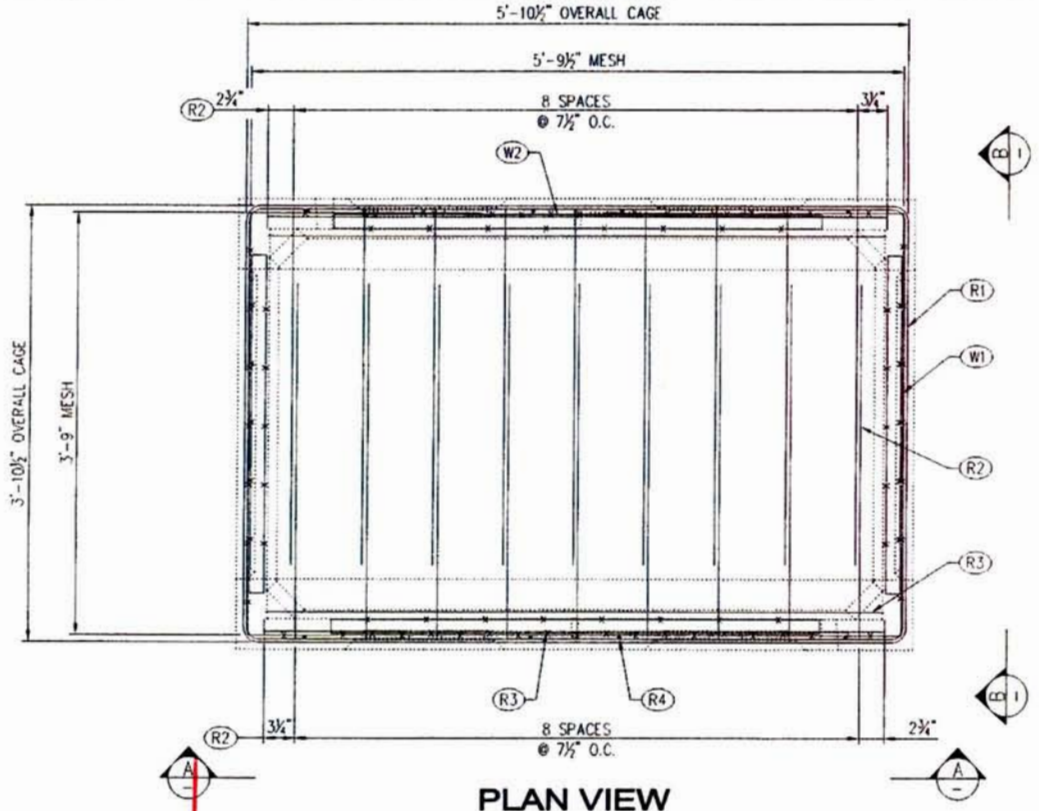

PLAN VIEW

REINFORCING (SHOWN AS POURED)

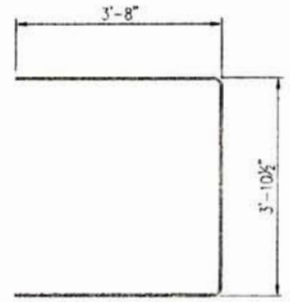

R1 DETAIL

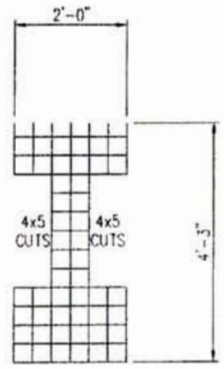

W2 DETAIL

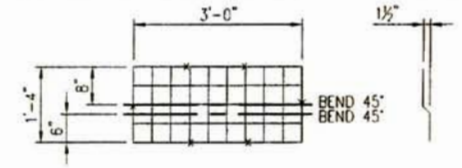

W3 DETAIL

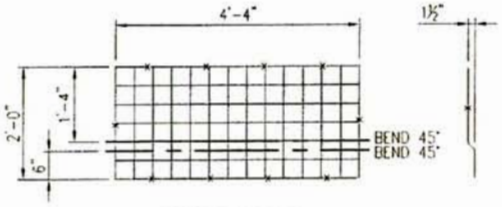

W4 DETAIL

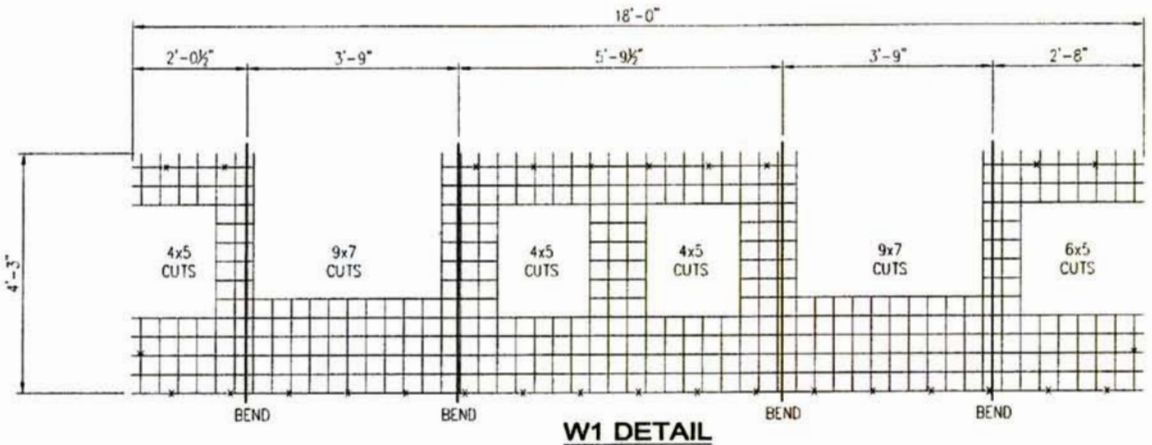

W1 DETAIL

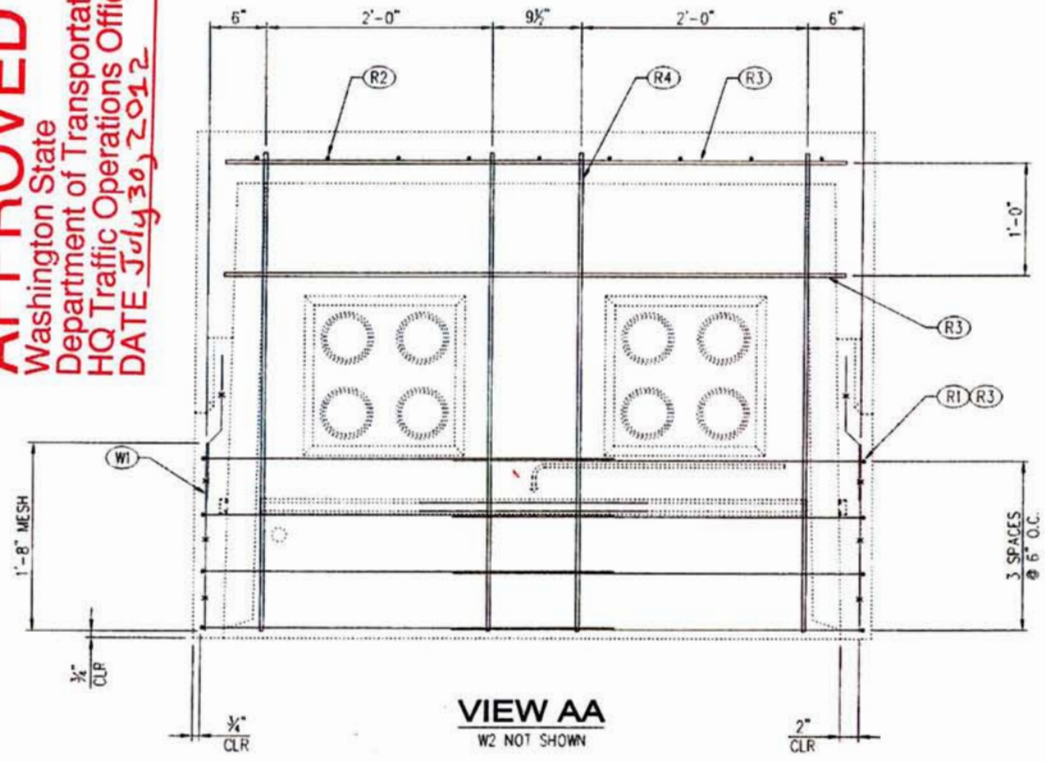

VIEW AA

W2 NOT SHOWN

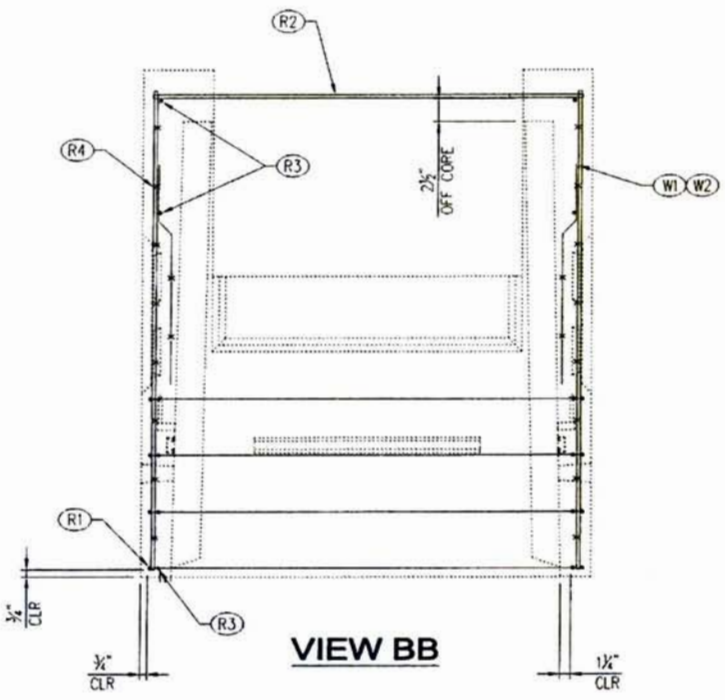

VIEW BB

REINFORCING CUT LIST					
PART	QTY	DESCRIPTION	FT	IN	SHAPE
R1	8	#3 Rebar	11	0	BENT
R2	18	#3 Rebar	3	2	STR
R3	12	#3 Rebar	5	6	STR
R4	8	#3 Rebar	4	3	STR
W1	1	Mesh 4x4 - W2.9 x W2.9			BENT
W2	1	Mesh 4x4 - W2.9 x W2.9			STR
W3	2	Mesh 4x4 - W2.9 x W2.9			BENT
W4	2	Mesh 4x4 - W2.9 x W2.9			STR

APPROVED
Washington State
Department of Transportation
HQ Traffic Operations Office
DATE July 30, 2012 TAT

STEVEN C. HIESTER
STATE OF WASHINGTON
21830
REGISTERED
PROFESSIONAL ENGINEER
7/23/12

LTR.	REVISION	DATE	BY
D	CHANGED DRAWING NUMBER	8/15/11	MLF
-	(SEE CAD FILE FOR REVISION HISTORY)	-	-

THIS DOCUMENT IS THE PROPERTY OF OLDCASTLE PRECAST, INC. IT IS SUBMITTED FOR REFERENCE PURPOSES ONLY AND SHALL NOT BE USED IN ANY WAY INJURIOUS TO THE INTERESTS OF SAID COMPANY. COPYRIGHT © 2011 Oldcastle Precast, Inc. All Rights Reserved

SALES		DATE	4/29/10
DESIGNER	JG	WEIGHT	
CHECKED		CALC NO	

Oldcastle Precast®

645 SPLIT CABLE BASE - WSDOT
REINFORCING DETAILS
CUSTOMER STANDARD PRODUCT

CUSTOMER: WASHINGTON STATE D.O.T.
DRAWING NUMBER: 010-0090033-001
SHEET: 2 of 2
REVISION: D

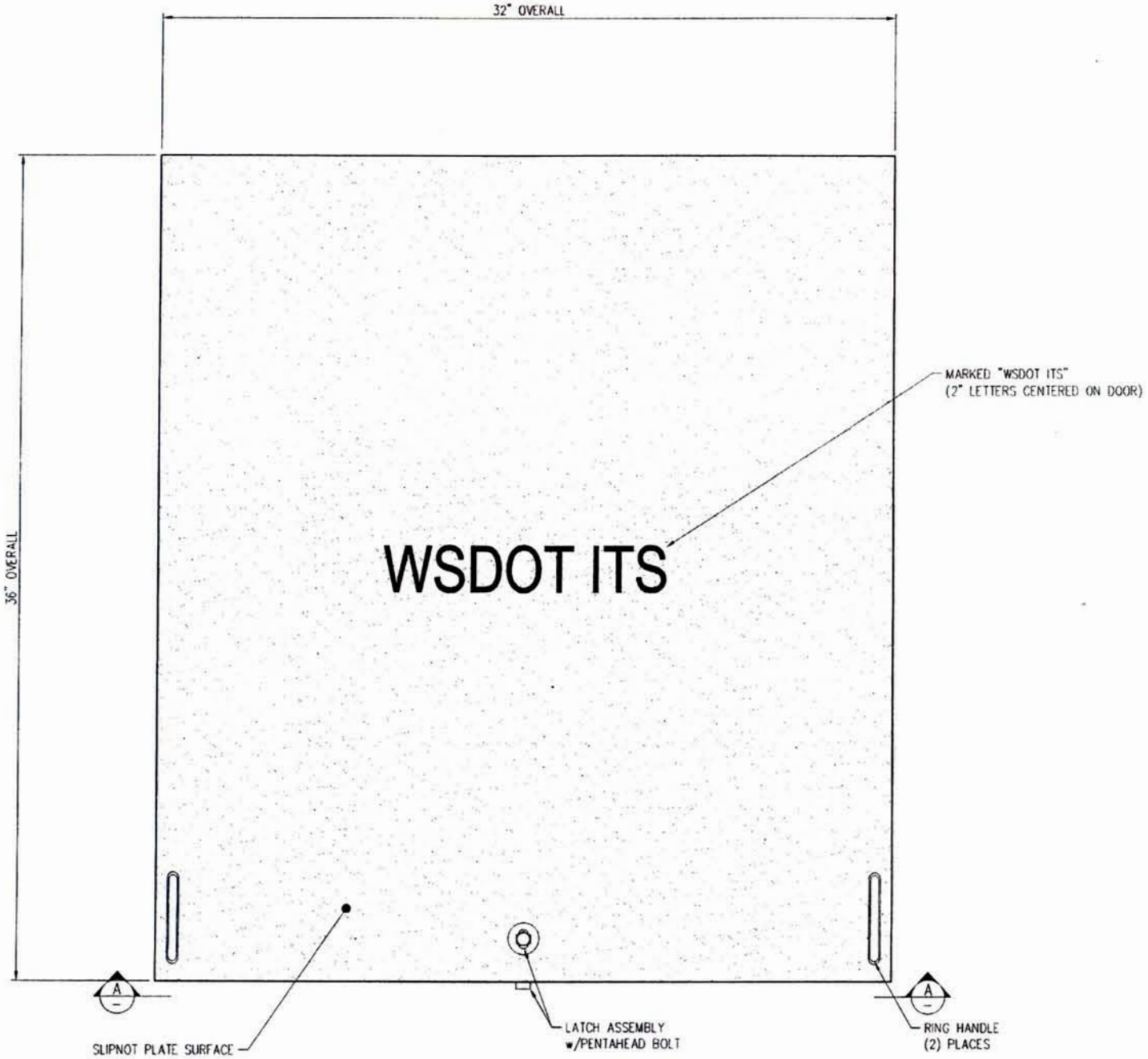

PLAN VIEW
(TOPSIDE OF DOOR SHOWN)

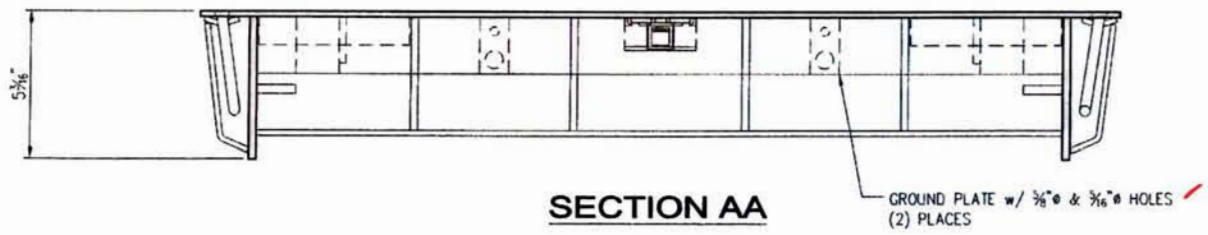

SECTION AA

STRUCTURAL NOTES

1. MATERIAL:	ASTM A36 STRUCTURAL STEEL STANDARDS
2. ASSEMBLY:	AWS D1.1 WELDING STANDARDS
3. COATING:	ASTM A123 HOT-DIP GALVANIZING STANDARDS
4. LOADS:	SUITABLE FOR AASHTO H-20 WHEEL LOADING IN OFF-STREET LOCATIONS WHERE NOT SUBJECTED TO HIGH-DENSITY TRAFFIC

GENERAL NOTES

1. FRAMES AVAILABLE TO USE WITH THIS DOOR:
   2270045 (2-332-SA-80 FRAME - WSDOT)
2. OPTIONAL LETTERING FOR DOORS AS REQUESTED:
   WSDOT TS
   WSDOT LT
   WSDOT EVC
   WSDOT TEL
   WSDOT COMM

APPROVED
Washington State
Department of Transportation
HQ Traffic Operations Office
DATE July 30, 2012 TAT

STEVEN C. HIMESTER
STATE OF WASHINGTON
21830
REGISTERED
PROFESSIONAL ENGINEER
7/23/12

LTR.	REVISION	DATE	BY
L	NO CHANGE TO THIS SHEET	6/27/12	MLF
-	(SEE CAD FILE FOR COMPLETE REVISION HISTORY)	-	-

THIS DOCUMENT IS THE PROPERTY OF OLDCASTLE PRECAST, INC. IT IS SUBMITTED FOR REFERENCE PURPOSES ONLY AND SHALL NOT BE USED IN ANY WAY INJURIOUS TO THE INTERESTS OF SAID COMPANY. COPYRIGHT © 2012 Oldcastle Precast, Inc. All Rights Reserved

SALES		DATE	6/22/10
DESIGNER	JG	WEIGHT	150 lbs
CHECKED		CALC NO	

Oldcastle Precast®
P.O. BOX 808 AUBURN, WA 98071-0808
PHONE: 800-860-1030 FAX: 253-735-4201

332-NS-SA-80 "WSDOT ITS"
CUSTOMER STANDARD PRODUCT

CUSTOMER	WASHINGTON STATE D.O.T.
DRAWING NUMBER	010-2270304-001
SHEET	1 of 5
REVISION	L

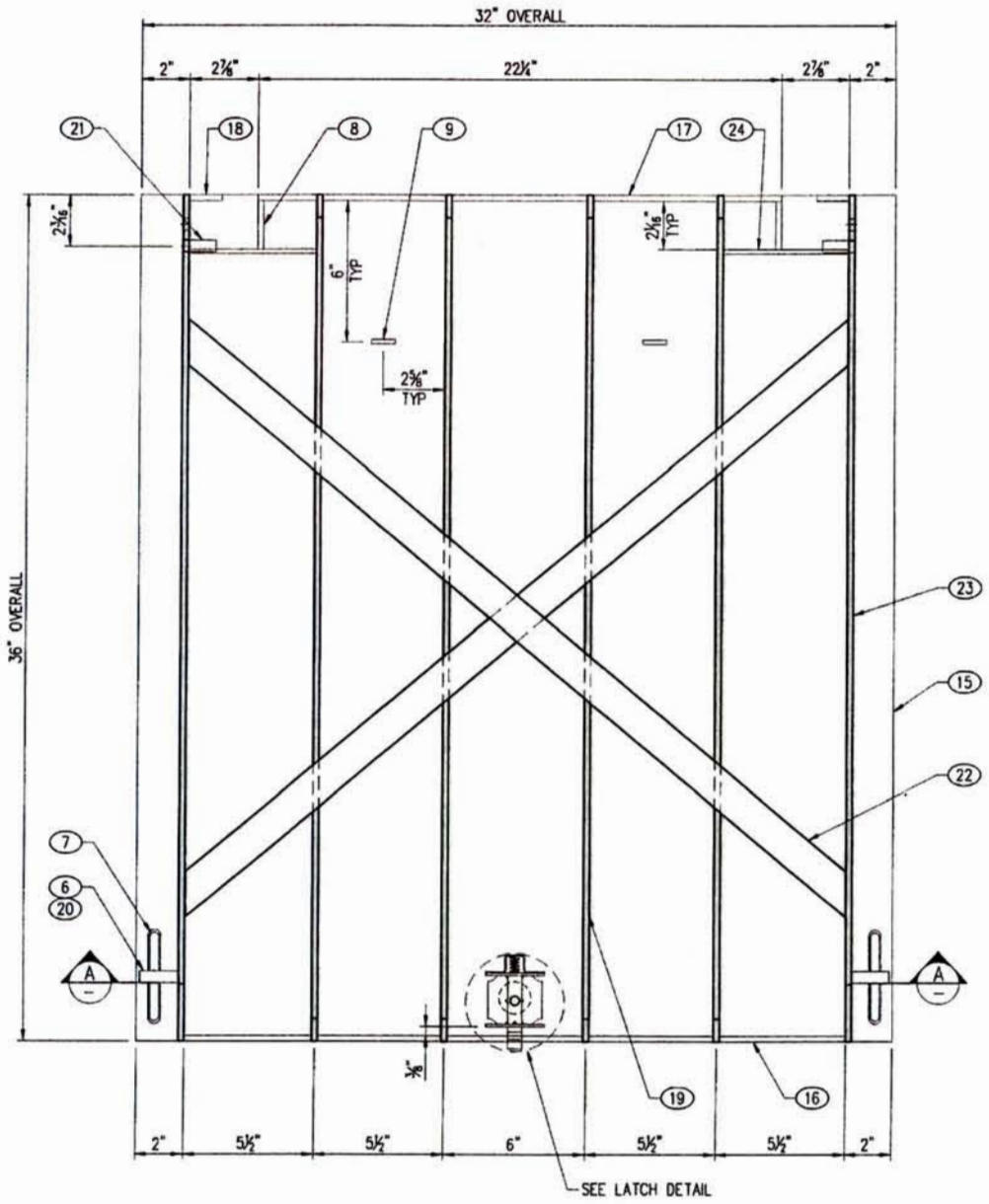

PLAN VIEW
(UNDERSIDE OF DOOR SHOWN)

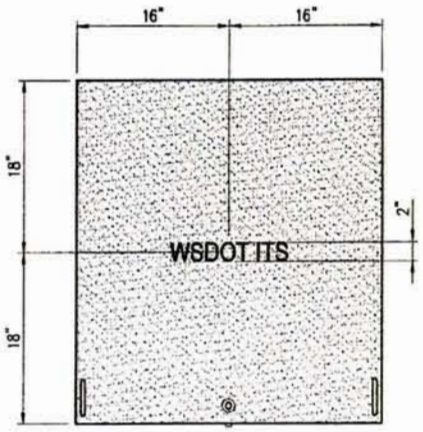

LETTERING DETAIL
(TOPSIDE OF DOOR SHOWN)

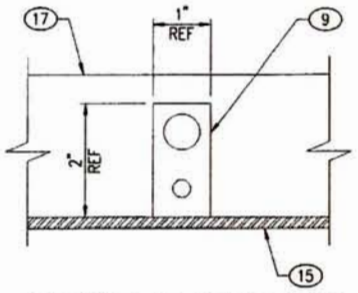

GROUND PLATE DETAIL

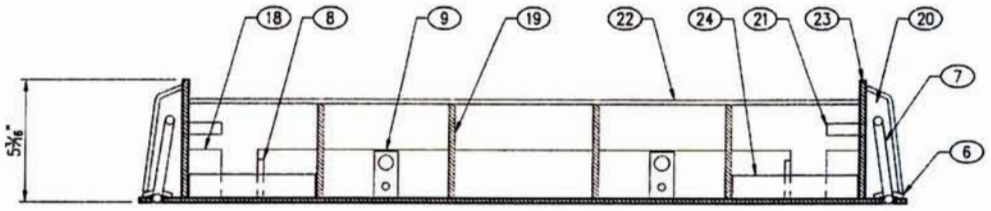

SECTION AA

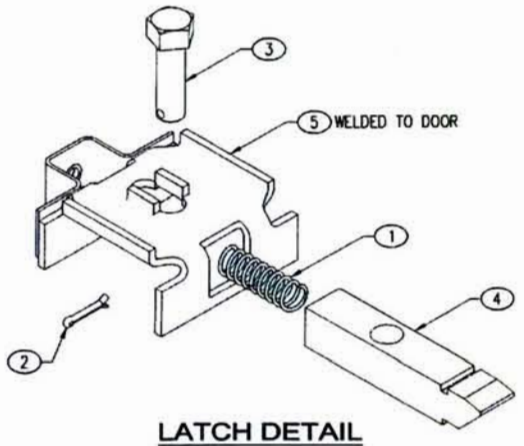

LATCH DETAIL

BILL OF MATERIAL

ASTM SPEC	PART	QTY	U/M	DESCRIPTION	ITEM #
A313	1	1	ea	Comp Spring OD.425"WD.045"L1.5"-PLTD	OPC
304	2	1	ea	Cotter Pin - 3/32" x 3/4"	OPC
302	3	1	ea	3/8" Pentahead Bolt - SS	010-5180810-001
6061-T6	4	1	ea	Latch Bolt	010-5210000-001
A1011 CS	5	1	ea	Latch Cage	010-5210045-001
A36	6	2	ea	Ring Clip (3/16 "x 3/4")	010-5210100-001
A36	7	2	ea	Ring Handle (3/8"ø)	010-5210090-001
A36	8	2	ea	Hinge Plate (1/4")	010-5220180-001
A36	9	2	ea	Ground Plate w/ 2 Holes (3/16" x 1")	010-5210010-001
A401	10	1	ea	Frame Spring '80 Style	010-5220290-000
A401	11	1	ea	Frame Spring '80 Style	010-5220300-000
A401	12	1	ea	Cover Spring '80 Style	010-5220310-000
A401	13	1	ea	Cover Spring '80 Style	010-5220320-000
A36	14	2	ea	Hinge '80 Style - GALV	010-5220330-000
A36		0.17	sht	SlipNot Plate 72" x 120" x 3/16"	010-5540120-000
A36		0.87	lbs	Flatbar 3/16" x 1"	010-5520030-000
A36		6.02	lbs	Flatbar 3/16" x 1-1/2"	010-5520050-000
A36		7.51	lbs	Flatbar 1/4" x 2"	010-5520160-000
A36		40.80	lbs	Flatbar 1/4" x 4"	010-5520170-000
A36		25.83	lbs	Flatbar 1/4" x 5"	010-5520171-000
A36		0.15	lbs	Round Bar 1/2"	010-5520225-000
A123		145	lbs	Galvanizing Per Lb.	010-5800000-000

LAYOUT CUT LIST

PART	QTY	DESCRIPTION	SIZE
15	1	Slipnot Plate 72" x 120" x 3/16"	SHT 4
16	1	Flatbar 1/4" x 2"	SHT 4
17	1	Flatbar 1/4" x 2"	22 1/4"
18	2	Flatbar 1/4" x 2"	1 3/8"
19	4	Flatbar 1/4" x 4"	SHT 5
20	2	Flatbar 1/4" x 5"	SHT 5
21	2	Round Bar 1/2"	1 3/8"
22	2	Flatbar 3/16" x 1-1/2"	SHT 5
23	2	Flatbar 1/4" x 5"	SHT 4
24	2	Flatbar 3/16" x 1"	5 5/16"

SHOP NOTES

1. OVERALL DIMENSIONS HAVE A MAXIMUM ALLOWABLE TOLERANCE OF ± 1/16"
2. GRIND ALL SHARP EDGES
3. DOOR TO BE HOT-DIPPED GALVANIZED AFTER FABRICATION.
4. PARTS INSTALLED WHEN THE DOOR IS ASSEMBLED IN FRAME: (10) (11) (12) (13) (14)

APPROVED
Washington State
Department of Transportation
HQ Traffic Operations Office
DATE July 30, 2012 TAT

STEVEN C. HIESTER
STATE OF WASHINGTON
21830
REGISTERED
PROFESSIONAL ENGINEER
7/23/12

LTR.	REVISION	DATE	BY
L	UPDATED BOM	6/27/12	MLF
-	(SEE CAD FILE FOR COMPLETE REVISION HISTORY)	-	-

THIS DOCUMENT IS THE PROPERTY OF OLDCASTLE PRECAST, INC. IT IS SUBMITTED FOR REFERENCE PURPOSES ONLY AND SHALL NOT BE USED IN ANY WAY INJURIOUS TO THE INTERESTS OF SAID COMPANY. COPYRIGHT © 2012 Oldcastle Precast, Inc. All Rights Reserved

SALES		DATE	6/22/10
DESIGNER	JG	WEIGHT	148 lbs
CHECKED		CALC NO	

Oldcastle Precast®
P.O. BOX 598 AUBURN, WA 98071-0598
PHONE: 800-860-1836 FAX: 253-735-4391

332-NS-SA-80 "WSDOT ITS"
ASSEMBLY DETAILS
CUSTOMER STANDARD PRODUCT

CUSTOMER: WASHINGTON STATE D.O.T.
DRAWING NUMBER: 010-2270304-001
SHEET: 2 of 5
REVISION: L

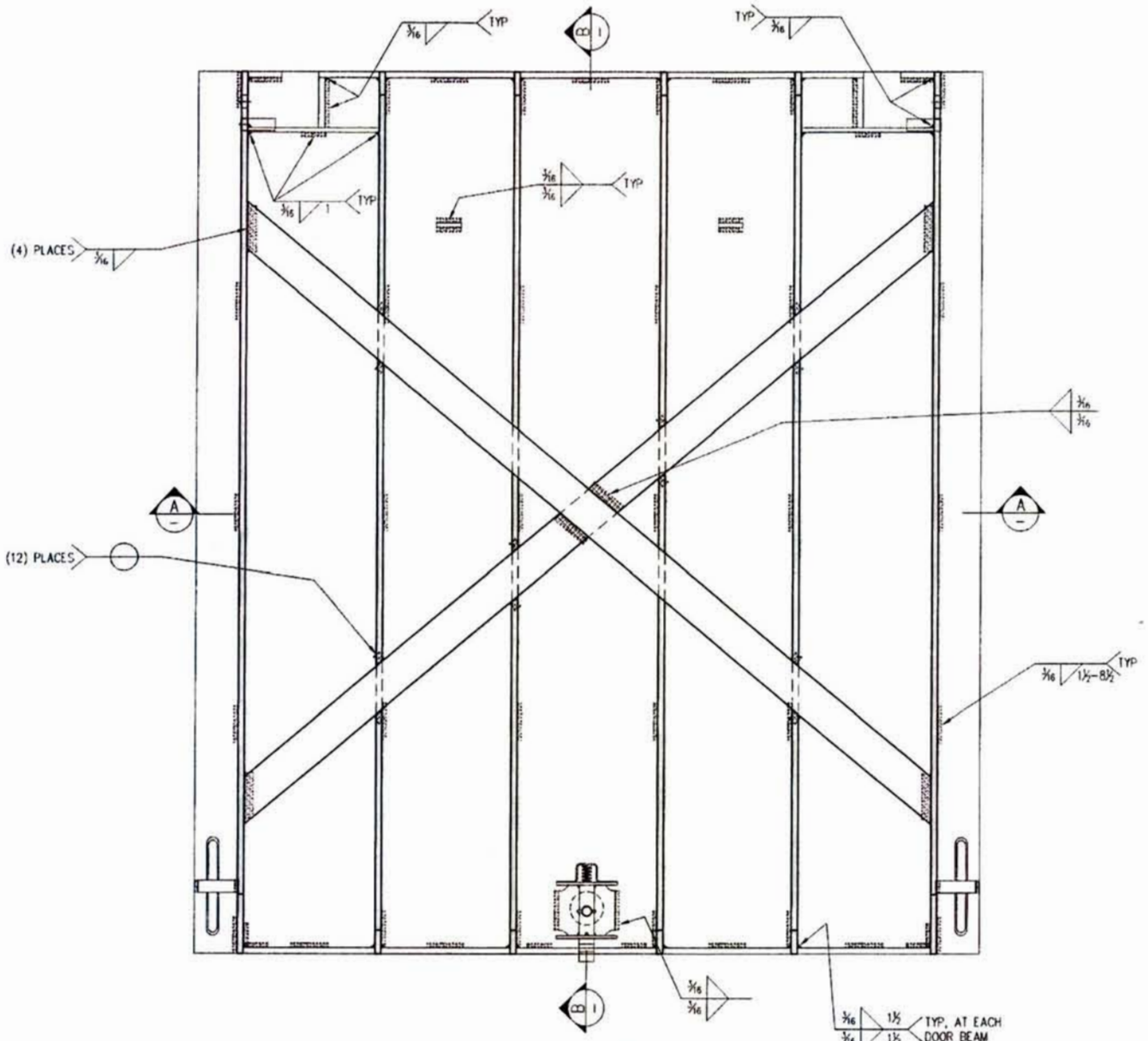

PLAN VIEW
(UNDERSIDE OF DOOR SHOWN)

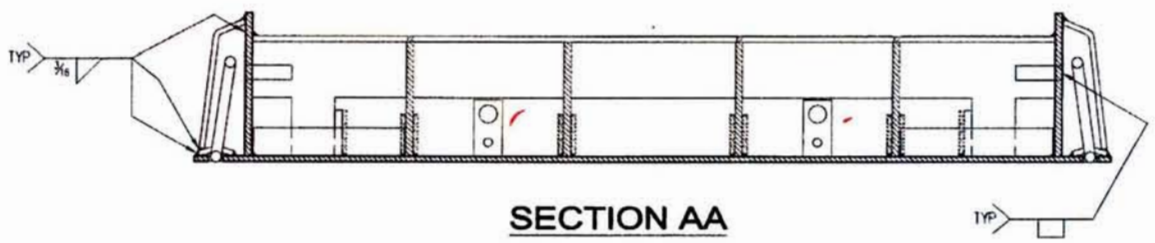

SECTION AA

STRUCTURAL NOTES

1. ASSEMBLY: AWS D1.1 WELDING STANDARDS

SHOP NOTES

1. ALL WELDS ARE TYPICAL 3/16" FILLET WELDS, UNLESS OTHERWISE NOTED

APPROVED
Washington State
Department of Transportation
HQ Traffic Operations Office
DATE July 30, 2012 TAT

STEVEN C. HESTER
STATE OF WASHINGTON
21830
REGISTERED
PROFESSIONAL ENGINEER
7/25/12

LTR	REVISION	DATE	BY
L	NO CHANGE TO THIS SHEET	6/27/12	MLF
–	(SEE CAD FILE FOR COMPLETE REVISION HISTORY)	–	–

THIS DOCUMENT IS THE PROPERTY OF OLDCASTLE PRECAST, INC. IT IS SUBMITTED FOR REFERENCE PURPOSES ONLY AND SHALL NOT BE USED IN ANY WAY INJURIOUS TO THE INTERESTS OF SAID COMPANY. COPYRIGHT © 2012 Oldcastle Precast, Inc. All Rights Reserved

SALES		DATE	6/22/10
DESIGNER	JG	WEIGHT	
CHECKED		CALC NO	

Oldcastle Precast®
P.O. BOX 888 AUBURN, WA 98071-0888
PHONE: 800-860-1535 FAX: 253-736-5291

332-NS-SA-80 "WSDOT ITS"
WELDMENT DETAILS
CUSTOMER STANDARD PRODUCT

CUSTOMER	WASHINGTON STATE D.O.T.
DRAWING NUMBER	010-2270304-001
SHEET	3 of 5
REVISION	L

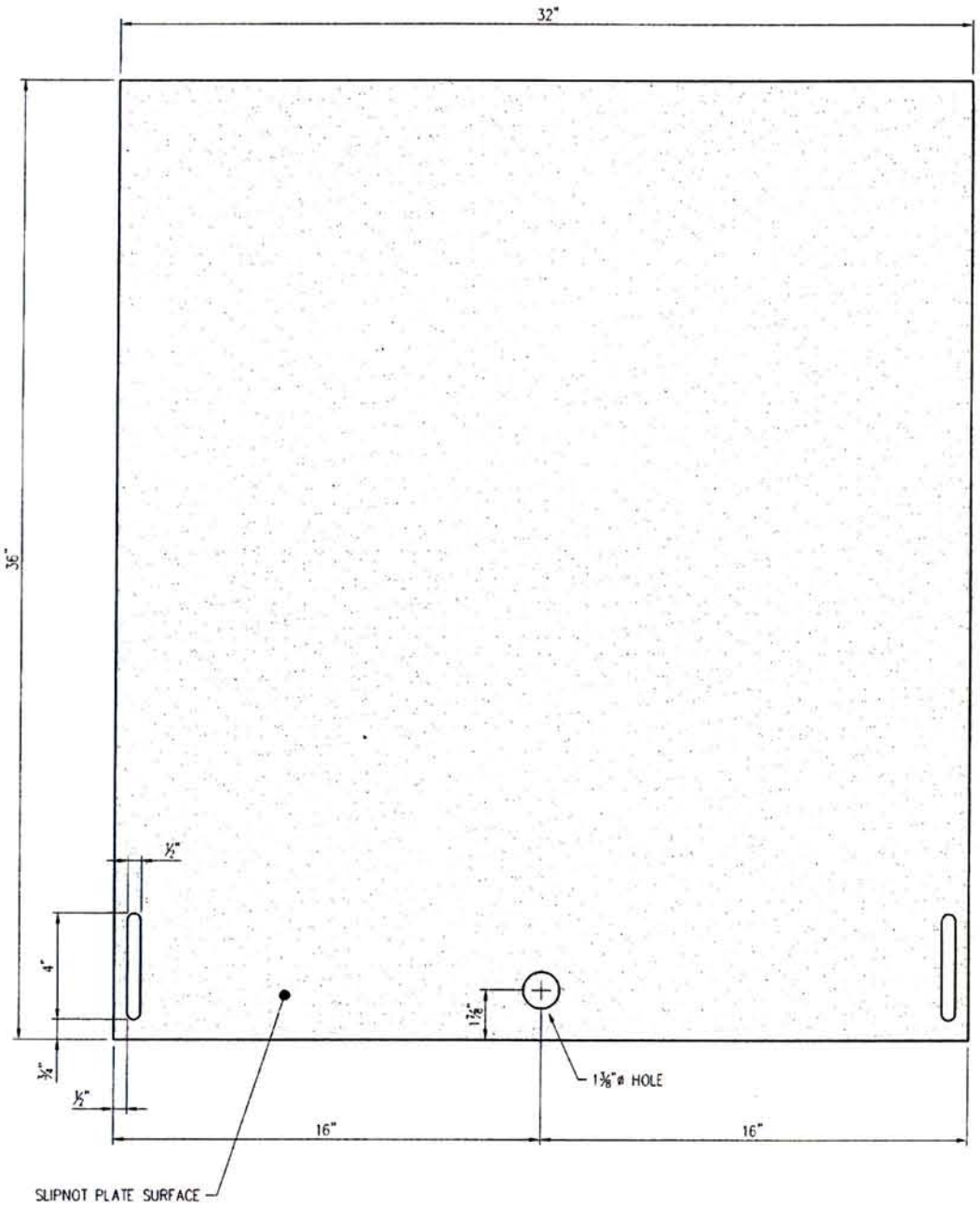

PART No. 15

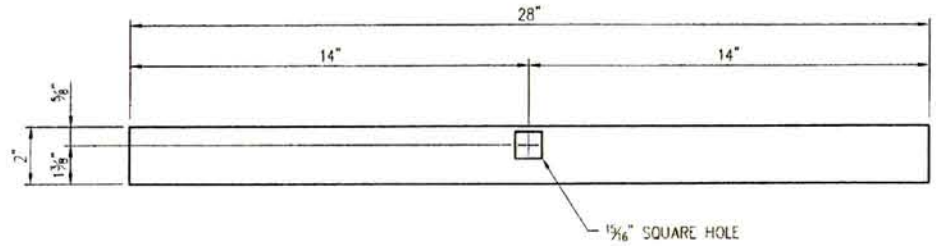

PART No. 16

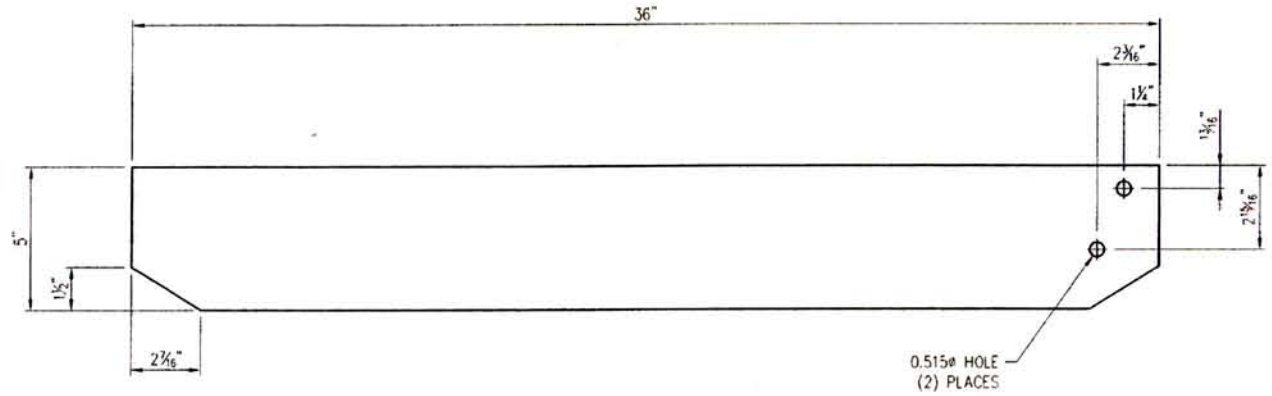

PART No. 23

SHOP NOTES

1. PLASMA PROGRAM NAMES: 332-NS-SA-80 STYLE-P15
2. CUT w/SLIPNOT PATTERN UP

LAYOUT CUT LIST			
PART	QTY	DESCRIPTION	SIZE
15	1	Slipnot Plate 72" x 120" x 3/16"	
16	1	Flatbar 1/4" x 2"	28"
23	2	Flatbar 1/4" x 5"	36"

APPROVED
Washington State
Department of Transportation
HQ Traffic Operations Office
DATE July 30, 2012 TAT

STEVEN C. HIESTER
STATE OF WASHINGTON
21830
REGISTERED
PROFESSIONAL ENGINEER
7/23/12

LTR.	REVISION	DATE	BY
L	NO CHANGE TO THIS SHEET	6/27/12	MLF
-	(SEE CAD FILE FOR COMPLETE REVISION HISTORY)	-	-

THIS DOCUMENT IS THE PROPERTY OF OLDCASTLE PRECAST, INC. IT IS SUBMITTED FOR REFERENCE PURPOSES ONLY AND SHALL NOT BE USED IN ANY WAY INJURIOUS TO THE INTERESTS OF SAID COMPANY. COPYRIGHT © 2012 Oldcastle Precast, Inc. All Rights Reserved

SALES		DATE	6/22/10
DESIGNER	JG	WEIGHT	
CHECKED		CALC NO	

Oldcastle Precast®
P.O. BOX 999 AUBURN, WA 98071-0999
PHONE: 888-882-1638 FAX: 253-735-4201

332-NS-SA-80 "WSDOT ITS"
PLASMA & PART CUT DETAILS
CUSTOMER STANDARD PRODUCT

CUSTOMER	WASHINGTON STATE D.O.T.
DRAWING NUMBER	010-270304-001
SHEET	4 of 5
REVISION	L

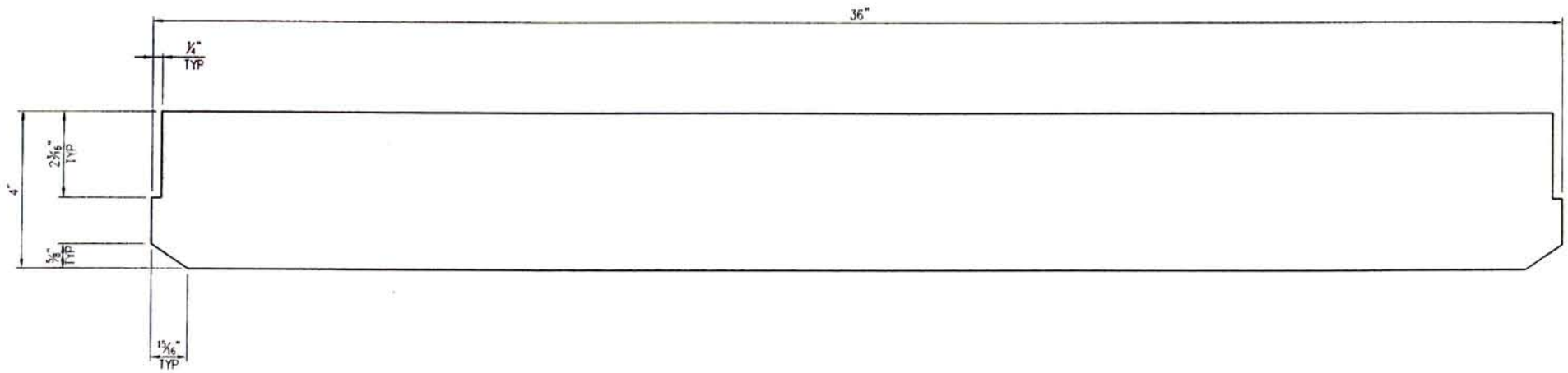

PART No. 19

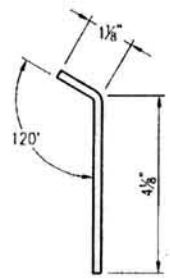

PART No. 20

LAYOUT CUT LIST			
PART	QTY	DESCRIPTION	SIZE
19	4	Flatbar 1/4" x 4"	36"
20	2	Flatbar 1/4" x 5"	1/2"
22	2	Flatbar 3/16" x 1-1/2"	37 3/4"

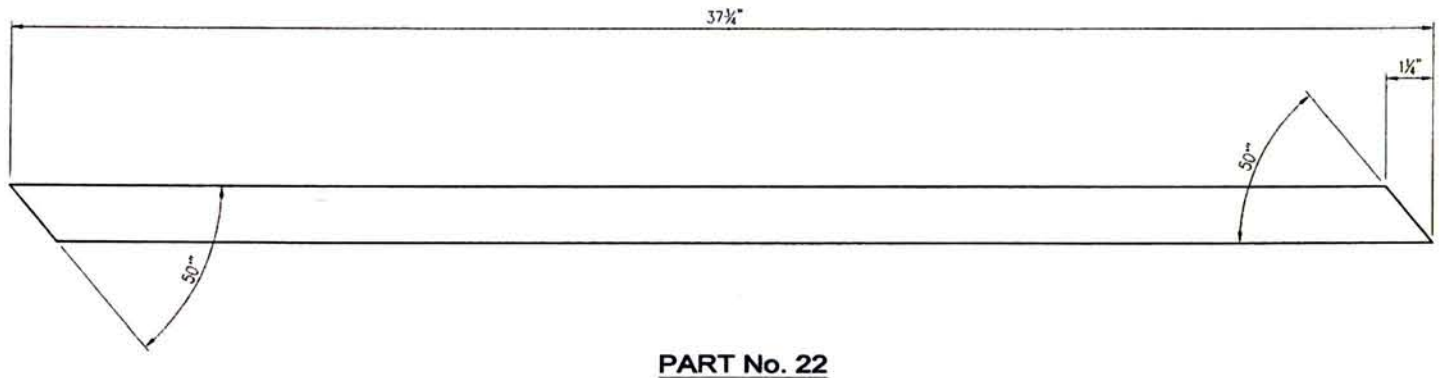

PART No. 22

APPROVED
Washington State
Department of Transportation
HQ Traffic Operations Office
DATE July 30, 2012 TAT

STEVEN C. HIESTER
STATE OF WASHINGTON
21830
REGISTERED
PROFESSIONAL ENGINEER
7/23/12

LTR.	REVISION	DATE	BY
L	NO CHANGE TO THIS SHEET	6/27/12	MLF
–	(SEE CAD FILE FOR COMPLETE REVISION HISTORY)	–	–

THIS DOCUMENT IS THE PROPERTY OF OLDCASTLE PRECAST, INC. IT IS SUBMITTED FOR REFERENCE PURPOSES ONLY AND SHALL NOT BE USED IN ANY WAY INJURIOUS TO THE INTERESTS OF SAID COMPANY. COPYRIGHT © 2012 Oldcastle Precast, Inc. All Rights Reserved

SALES		DATE	6/22/10
DESIGNER	JG	WEIGHT	
CHECKED		CALC NO	

Oldcastle Precast®

332-NS-SA-80 "WSDOT ITS"
PART CUT DETAILS
CUSTOMER STANDARD PRODUCT

CUSTOMER	WASHINGTON STATE D.O.T.
DRAWING NUMBER	010-2270304-001
SHEET	5 OF 5
REVISION	L

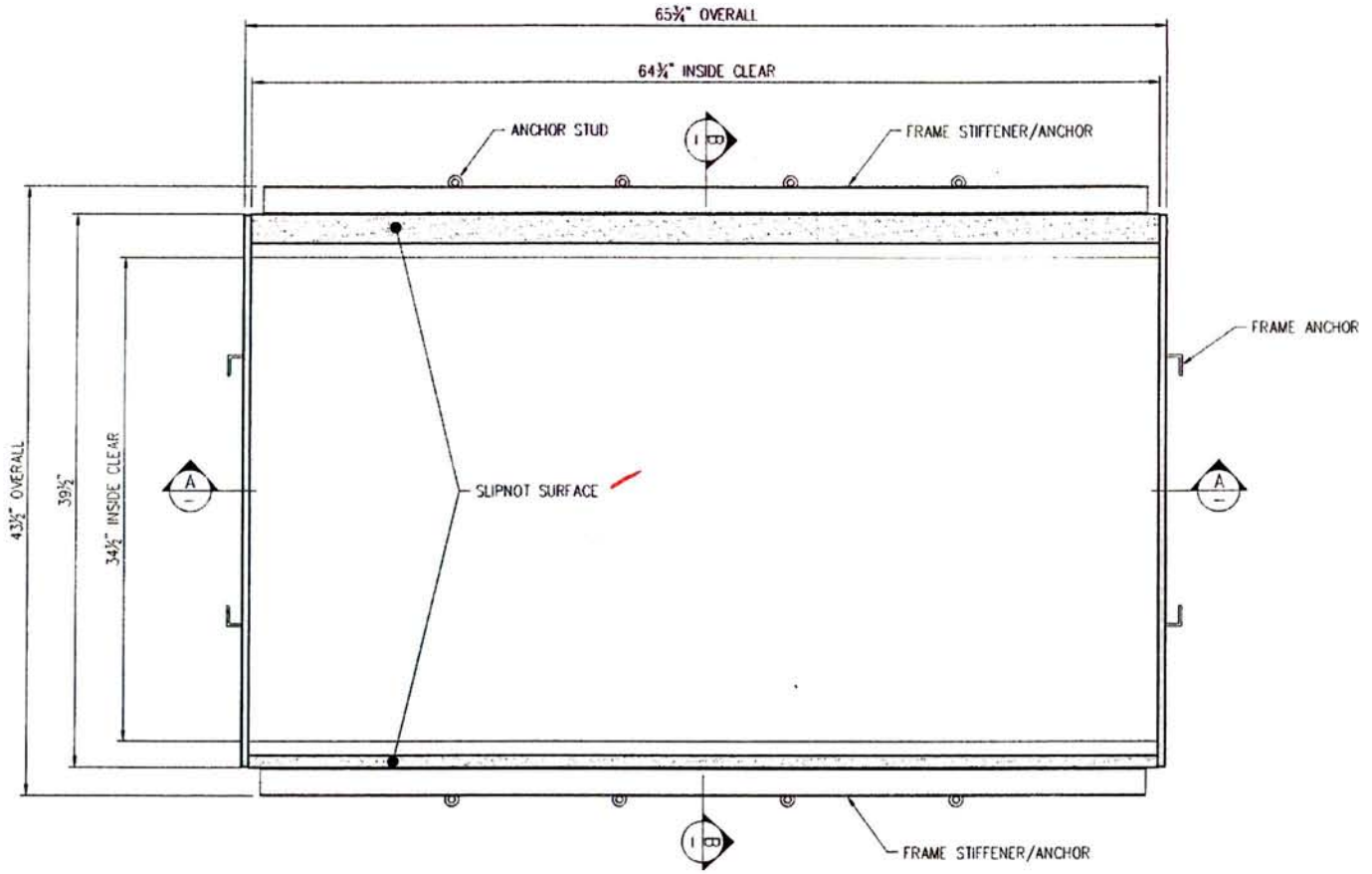

PLAN VIEW

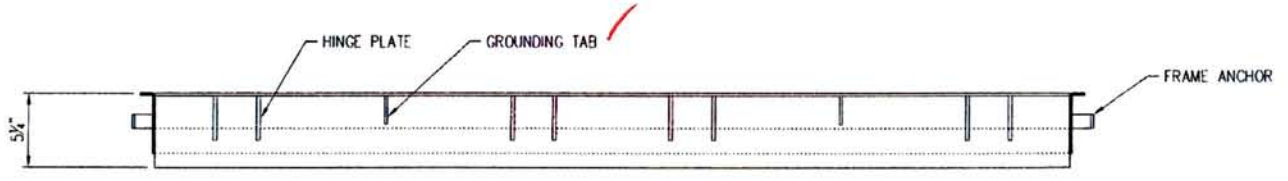

SECTION AA

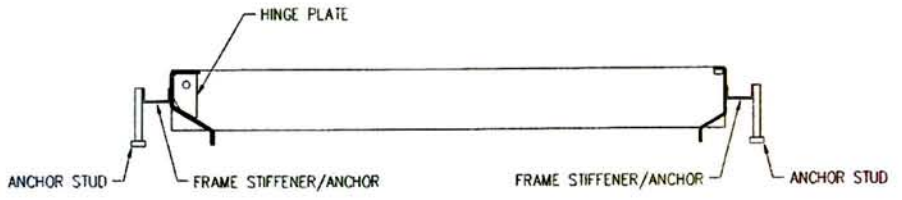

SECTION BB

STRUCTURAL NOTES

1.	MATERIAL:	ASTM A36/A1011 STRUCTURAL STEEL STANDARDS
2.	ASSEMBLY:	AWS D1.1 WELDING STANDARDS
3.	COATING:	ASTM A123 HOT-DIP GALVANIZING STANDARDS
4.	LOADS:	SUITABLE FOR AASHTO H-20 WHEEL LOADING IN OFF-STREET LOCATIONS WHERE NOT SUBJECTED TO HIGH-DENSITY TRAFFIC

GENERAL NOTES

1. DOORS AVAILABLE TO USE WITH THIS FRAME:
   2270304 (J332-NS-SA-80 "WSDOT ITS")

APPROVED
Washington State
Department of Transportation
HQ Traffic Operations Office
DATE July 30, 2012 TAT

STEVEN C. HESTER
STATE OF WASHINGTON
21830
REGISTERED
PROFESSIONAL ENGINEER
7/23/12

LTR.	REVISION	DATE	BY
H	NO CHANGE TO THIS SHEET	6/27/12	MLF
-	(SEE CAD FILE FOR COMPLETE REVISION HISTORY)	-	-

THIS DOCUMENT IS THE PROPERTY OF OLDCASTLE PRECAST, INC. IT IS SUBMITTED FOR REFERENCE PURPOSES ONLY AND SHALL NOT BE USED IN ANY WAY INJURIOUS TO THE INTERESTS OF SAID COMPANY. COPYRIGHT © 2012 Oldcastle Precast, Inc. All Rights Reserved

SALES		DATE	6/23/10
DESIGNER	JG	WEIGHT	72 lbs
CHECKED		CALC NO	

Oldcastle Precast®
P.O. BOX 888 AUBURN, WA 98071-0888
PHONE: 800-663-1638 FAX: 253-735-4201

2-332-SA-80 FRAME - WSDOT

CUSTOMER STANDARD PRODUCT

CUSTOMER	WASHINGTON STATE D.O.T.
DRAWING NUMBER	010-2270045-001
SHEET	1 of 4
REVISION	H

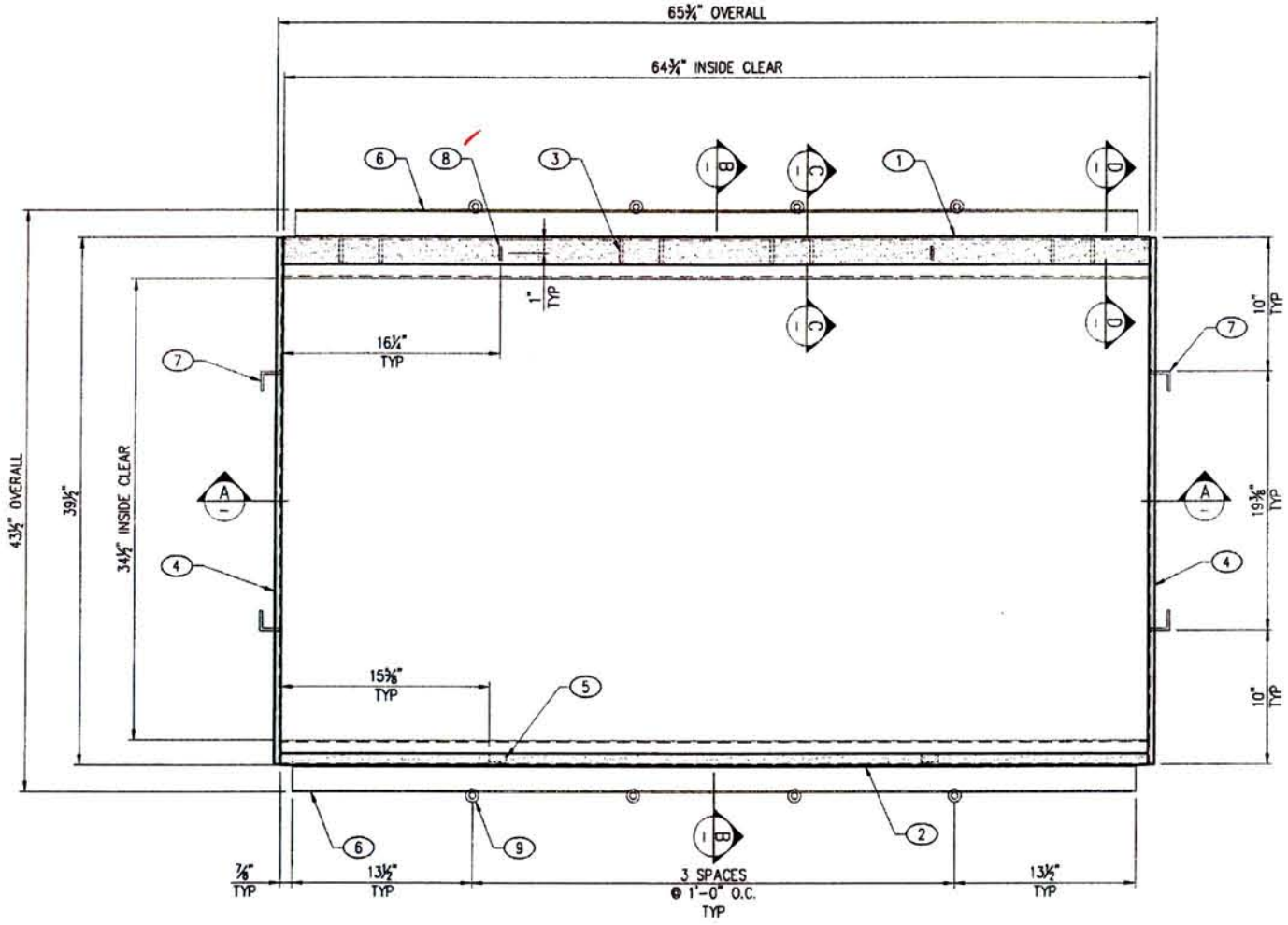

PLAN VIEW

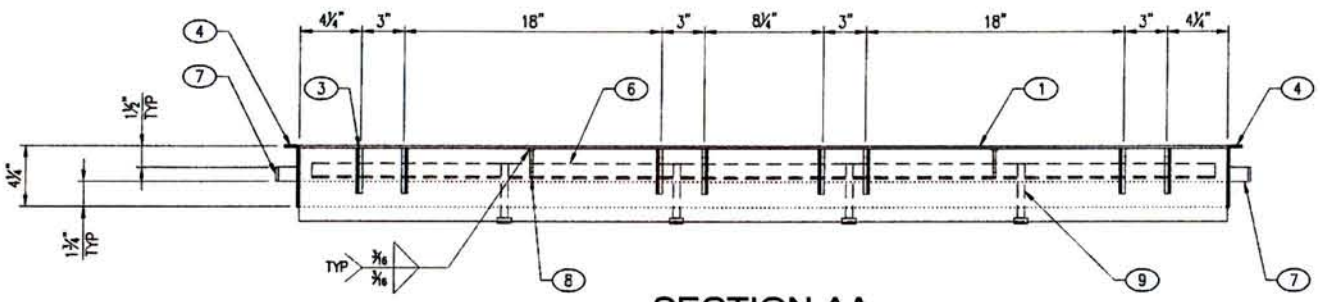

SECTION AA

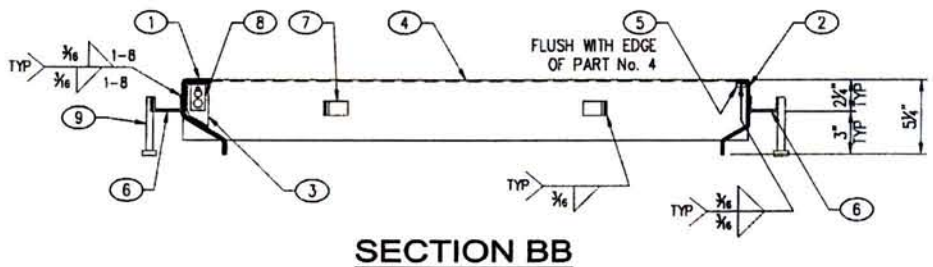

SECTION BB

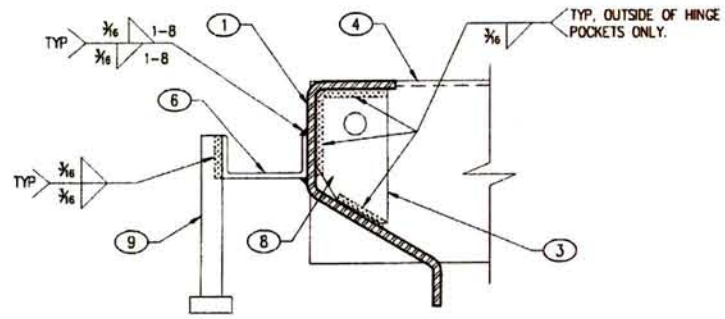

SECTION CC

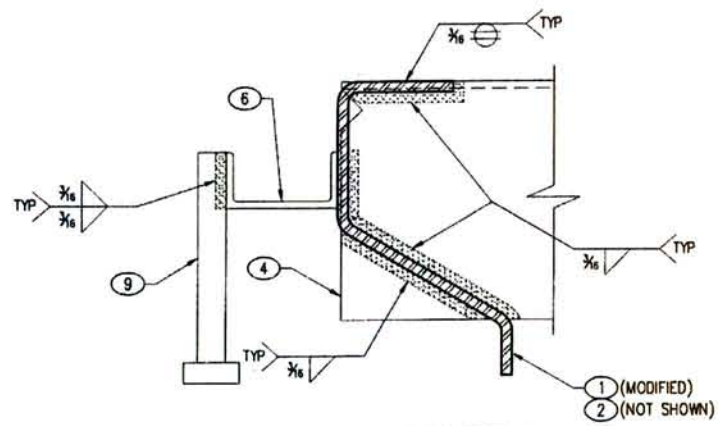

SECTION DD

TYPICAL ALL CORNERS

BILL OF MATERIAL

ASTM SPEC	PART	QTY	U/M	DESCRIPTION	ITEM #	
A36	1	1	ea	Rear Frame Member	010-5340700-000	MODIFIED SEE SHEET 4
A36	2	1	ea	Front Frame Member	010-5340710-000	MODIFIED SEE SHEET 4
A1018	3	8	ea	Hinge Plate (1/4")	010-5220100-001	
A36	8	2	ea	Ground Plate w/ 2 Holes	010-5210010-001	
A108	9	8	ea	Stud 1/2" x 4-1/8"	010-5910460-000	
A36		0.17	lbs	Flatbar 3/8" x 1-1/4"	010-5520181-000	
A36		0.05	sht	Smooth Plate 72" x 120" x 3/16"	010-5540174-000	
A36		16.80	lbs	Channel 2" x 1" x 1/8"	010-5520230-000	
A36		0.60	lbs	Angle 1-1/2" x 1-1/2" x 3/16"	010-5510210-000	
A123		72	lbs	Galvanizing Per Lb.	010-5800000-000	
A36		0.03	sht	SlipNot Plate 72" x 120" x 3/16"	010-5540120-000	

LAYOUT CUT LIST

PART	QTY	DESCRIPTION	SIZE	
4	2	Smooth Plate 72" x 120" x 3/16"	Sheet 3	
5	2	Flatbar 3/8" x 1 1/4"	5/8"	
6	2	Channel 2" x 1" x 1/8"	63"	
7	4	Angle 1-1/2" x 1-1/2" x 3/16"	1"	
8	1	Slipnot Plate 72" x 120" x 3/16"	Sheet 4	THIS PART IS USED TO CREATE PART No. 1
9	1	Slipnot Plate 72" x 120" x 3/16"	Sheet 4	THIS PART IS USED TO CREATE PART No. 2

SHOP NOTES

1. OVERALL DIMENSIONS HAVE A MAXIMUM ALLOWABLE TOLERANCE OF ± 1/16"
2. ALL WELDS ARE 3/16" FILLET WELDS, UNLESS OTHERWISE NOTED
3. GRIND ALL SHARP EDGES
4. DOOR TO BE HOT-DIPPED GALVANIZED AFTER FABRICATION.

APPROVED
Washington State
Department of Transportation
HQ Traffic Operations Office
DATE July 30, 2012 TAT

STEVEN C. HIESTER
STATE OF WASHINGTON
21830
REGISTERED
PROFESSIONAL ENGINEER
7/23/12

LTR.	REVISION	DATE	BY
H	UPDATED BOM	6/27/12	MLF
–	(SEE CAD FILE FOR COMPLETE REVISION HISTORY)	–	–

THIS DOCUMENT IS THE PROPERTY OF OLDCASTLE PRECAST, INC. IT IS SUBMITTED FOR REFERENCE PURPOSES ONLY AND SHALL NOT BE USED IN ANY WAY INJURIOUS TO THE INTERESTS OF SAID COMPANY. COPYRIGHT © 2012 Oldcastle Precast, Inc. All Rights Reserved

SALES		DATE	6/23/10
DESIGNER	JG	WEIGHT	72 lbs
CHECKED		CALC NO	

Oldcastle Precast®
P.O. BOX 886 AUBURN, WA 98071-0886
PHONE: 800-882-1536 FAX: 253-735-0201

2-332-SA-80 FRAME – WSDOT
ASSEMBLY & WELD DETAILS
CUSTOMER STANDARD PRODUCT

CUSTOMER	SHEET
WASHINGTON STATE D.O.T.	2 of 4
DRAWING NUMBER	REVISION
010-270045-001	H

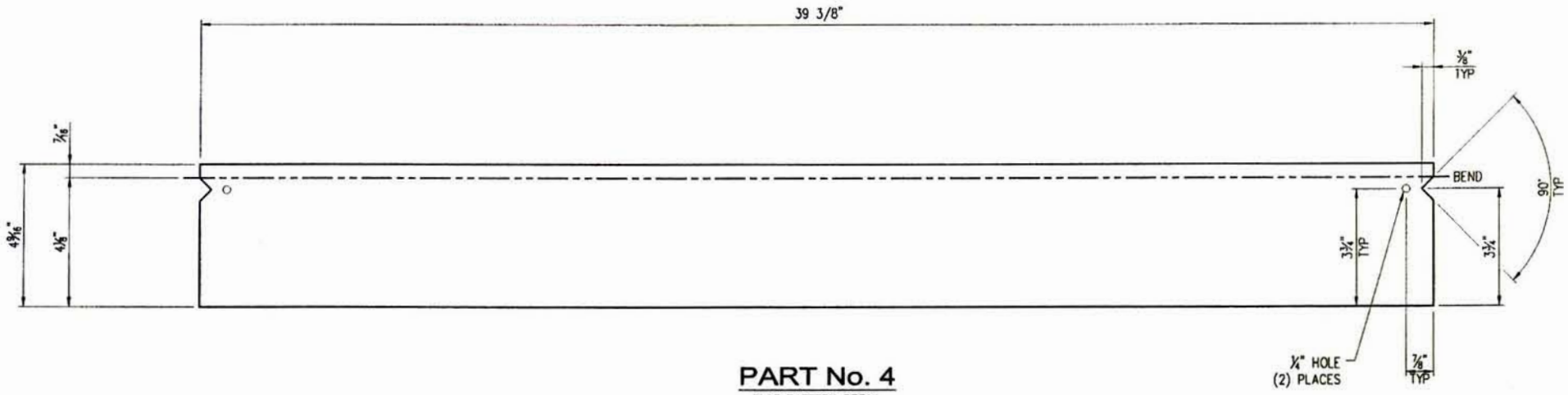

PART No. 4
FLAT PATTERN DETAIL

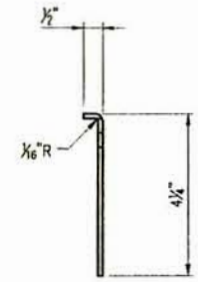

PART No. 4
BEND DETAIL

LAYOUT CUT LIST			
PART	QTY	DESCRIPTION	SIZE
4	2	Smooth Plate 72" x 120" x 3/16"	--

SHOP NOTES

1. PLASMA PROGRAM NAMES: WSDOT-SA-80FRAME-P4
2. CUT WITH SLIPNOT FINISH SIDE UP

APPROVED
Washington State
Department of Transportation
HQ Traffic Operations Office
DATE July 30, 2012 TAT

STEVEN C. HIESTER
STATE OF WASHINGTON
21830
REGISTERED
PROFESSIONAL ENGINEER
7/23/12

LTR.	REVISION	DATE	BY
H	NO CHANGE TO THIS SHEET	6/27/12	MLF
-	(SEE CAD FILE FOR COMPLETE REVISION HISTORY)	-	-

THIS DOCUMENT IS THE PROPERTY OF OLDCASTLE PRECAST, INC. IT IS SUBMITTED FOR REFERENCE PURPOSES ONLY AND SHALL NOT BE USED IN ANY WAY INJURIOUS TO THE INTERESTS OF SAID COMPANY. COPYRIGHT © 2012 Oldcastle Precast, Inc. All Rights Reserved

SALES		DATE	6/23/10
DESIGNER	JG	WEIGHT	
CHECKED		CALC NO	

Oldcastle Precast®
P.O. BOX 888 AUBURN, WA 98071-0888
PHONE: 800-562-1636 FAX: 253-735-4201

2-332-SA-80 FRAME - WSDOT
PART CUT & PLASMA DETAILS
CUSTOMER STANDARD PRODUCT

CUSTOMER	WASHINGTON STATE D.O.T.
DRAWING NUMBER	010-2270045-001
SHEET	3 OF 4
REVISION	H

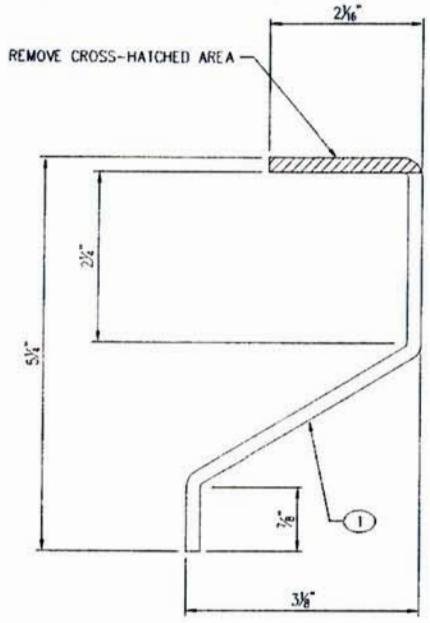

PART No. 1

LEG CUT-OFF MODIFICATION

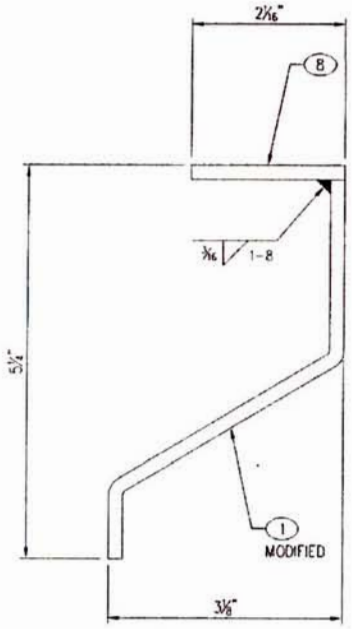

FINISHED PART No. 1

SLIPNOT LEG ADD-ON
WELD DETAIL

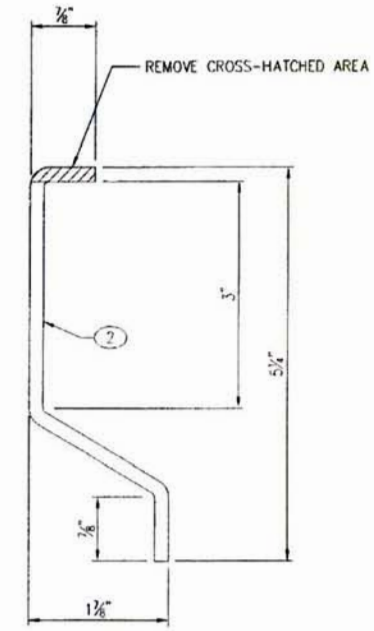

PART No. 2

LEG CUT-OFF MODIFICATION

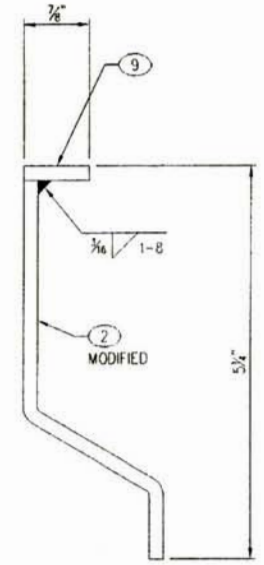

FINISHED PART No. 2

SLIPNOT LEG ADD-ON
WELD DETAIL

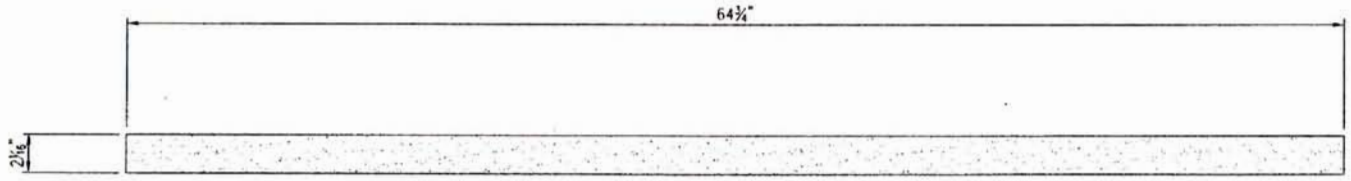

PART No. 8

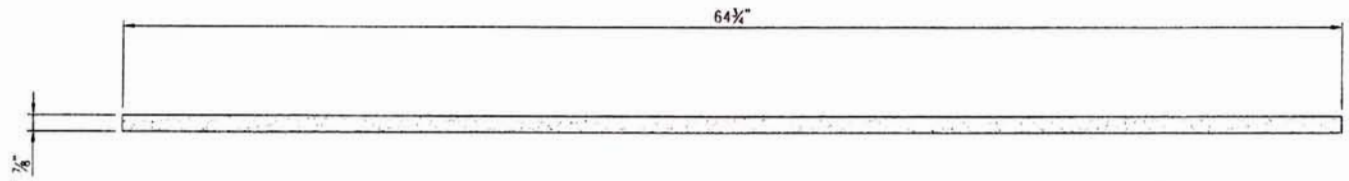

PART No. 9

SHOP NOTES

1. PLASMA PROGRAM NAMES: WSDOT-SA-80FRAME-P8
   WSDOT-SA-80FRAME-P9
2. CUT WITH SLIPNOT FINISH SIDE UP

LAYOUT CUT LIST			
PART	QTY	DESCRIPTION	SIZE
8	1	Slipnot Plate 72" x 120" x 3/16"	--
9	1	Slipnot Plate 72" x 120" x 3/16"	--

APPROVED
Washington State
Department of Transportation
HQ Traffic Operations Office
DATE July 30, 2012 TAT

LTR.	REVISION	DATE	BY
H	NO CHANGE TO THIS SHEET	6/27/12	MLF
-	(SEE CAD FILE FOR COMPLETE REVISION HISTORY)	-	-

THIS DOCUMENT IS THE PROPERTY OF OLDCASTLE PRECAST, INC. IT IS SUBMITTED FOR REFERENCE PURPOSES ONLY AND SHALL NOT BE USED IN ANY WAY INJURIOUS TO THE INTERESTS OF SAID COMPANY. COPYRIGHT © 2012 Oldcastle Precast, Inc. All Rights Reserved

SALES		DATE 6/23/10	
DESIGNER	JG	WEIGHT	
CHECKED		CALC NO	

Oldcastle Precast®
P.O. BOX 888 AUBURN, WA 98071-0888
PHONE: 800-562-1636 FAX: 253-735-4291

2-332-SA-80 FRAME - WSDOT
PART CUT & WELDMENT DETAIL
CUSTOMER STANDARD PRODUCT

CUSTOMER: WASHINGTON STATE D.O.T.
DRAWING NUMBER: 010-2270045-001
SHEET: 4 OF 4
REVISION: H

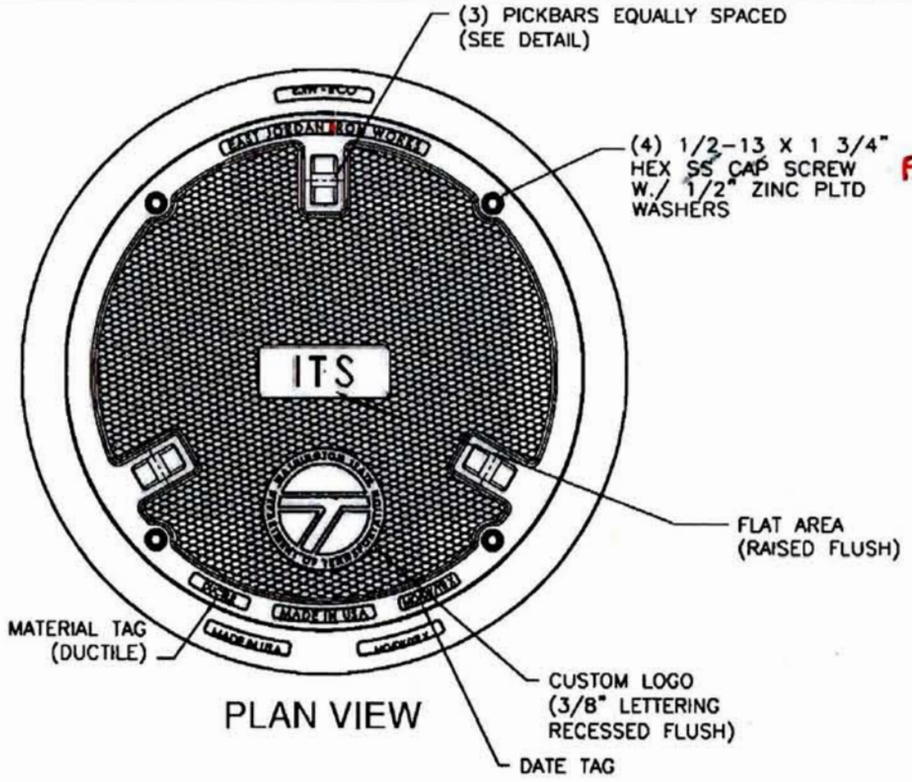

PLAN VIEW

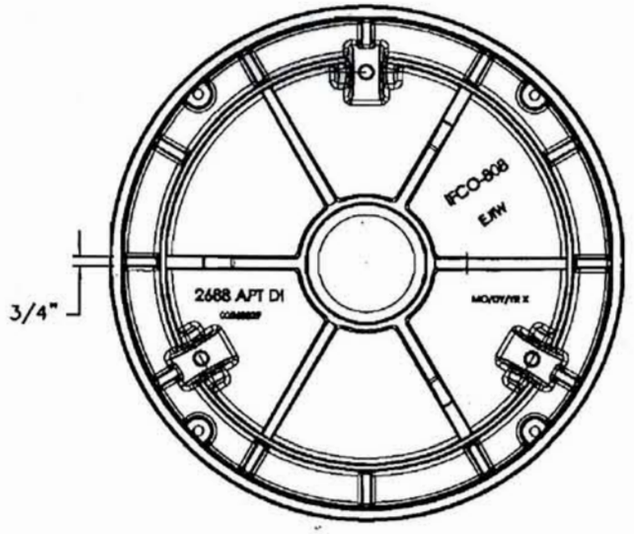

COVER BOTTOM

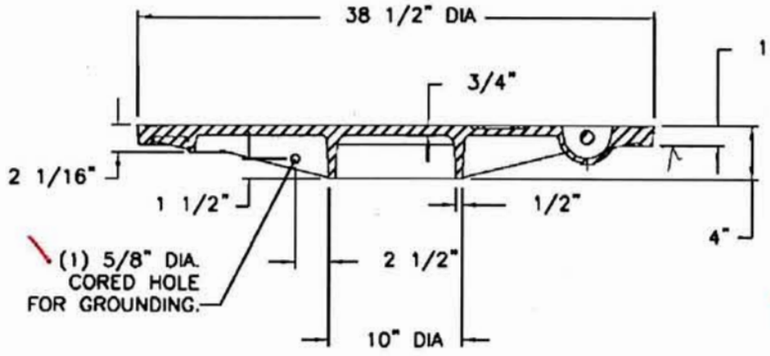

COVER SECTION

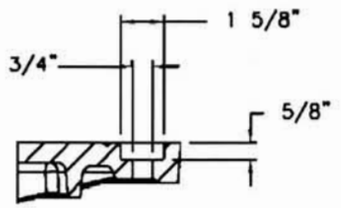

BOLTHOLE
DETAIL

APPROVED AS NOTED
Washington State
Department of Transportation
HQ Traffic Operations Office
DATE September 1, 2010 TAT

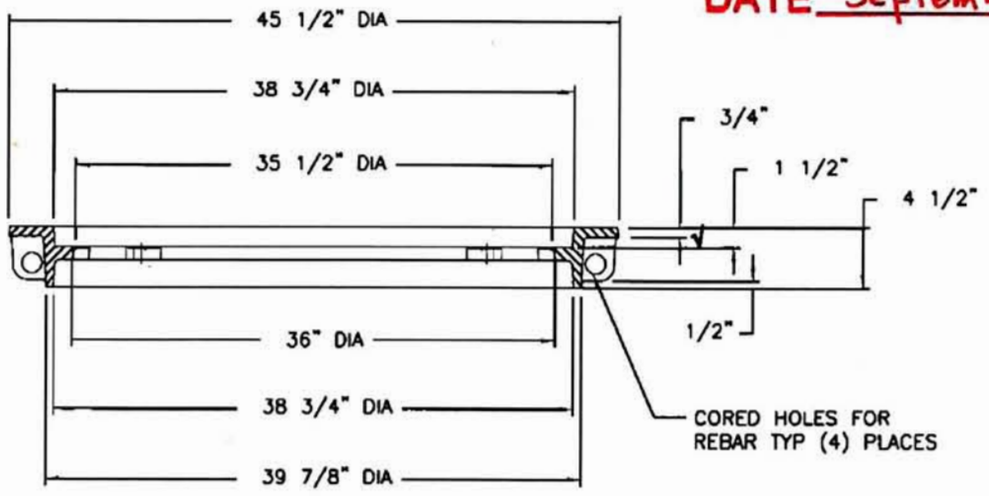

FRAME SECTION

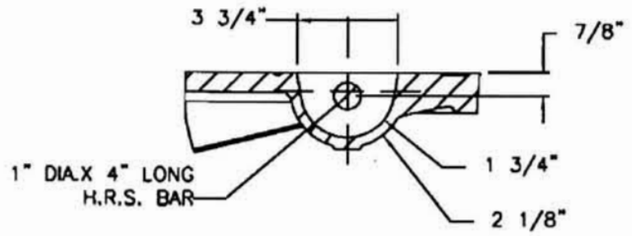

PICKBAR
DETAIL

√ MACHINED SURFACE

CONFIDENTIAL: This drawing is the property of East Jordan Iron Works, Inc. and embodies confidential information, trade secret information, and/or know how that is the property of East Jordan Iron Works, Inc. © Copyright 2007 East Jordan Iron Works, Inc.

EJIW EAST JORDAN IRON WORKS EST.1883
800-626-4653
www.ejiw.com
MADE IN USA

PRODUCT NUMBER
00268801

CATALOG NUMBER
2688Z2PT
2688 APT DI

MANHOLE ASSEMBLY

LOAD RATING
HEAVY DUTY

COATING
UNDIPPED

ESTIMATED WEIGHT
COVER: 311 LBS
FRAME: 225 LBS
UNIT: 532 LBS

MATERIAL SPECIFICATION
COVER – DUCTILE IRON ASTM A536 √
FRAME – GRAY IRON ASTM A48 CL35B

OPEN AREA
N/A

√ DESIGNATES MACHINED SURFACE

DRAWN	DATE
DEW	05/18/06
LAST REVISED	DATE
JJD	05/22/08

REFERENCE INFORMATION
00XXXXXX

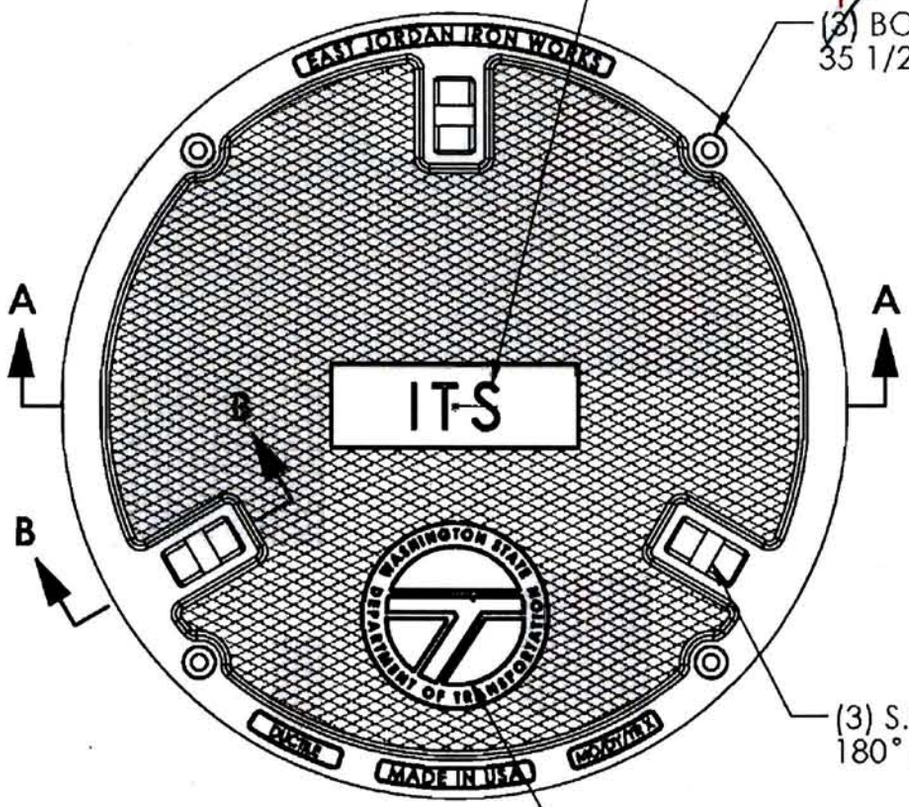

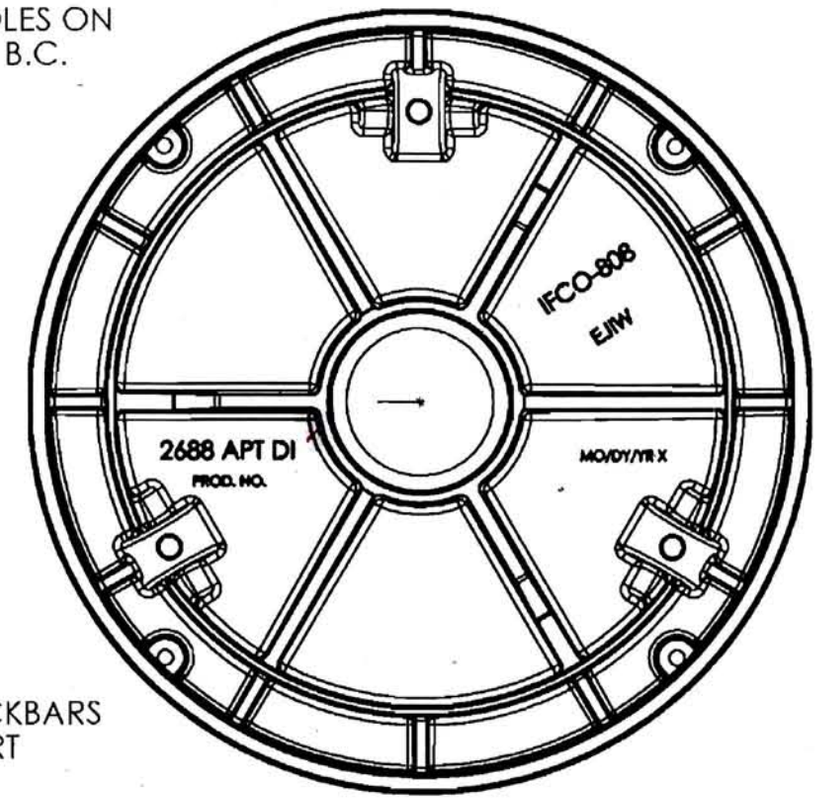

BOTTOM VIEW

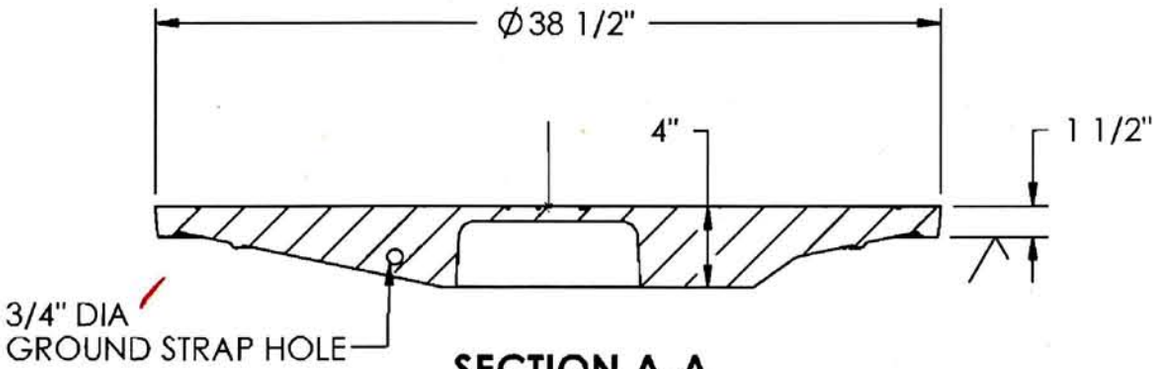

SECTION A-A

SECTION B-B

APPROVED
Washington State
Department of Transportation
HQ Traffic Operations Office
DATE September 1, 2010 TAT

CONFIDENTIAL: This drawing is the property of East Jordan Iron Works, Inc. and embodies confidential information, trade secret information, and/or know how that is the property of East Jordan Iron Works, Inc.©Copyright 2009 East Jordan Iron Works, Inc.

EJIW EAST JORDAN IRON WORKS EST.1883
800-626-4653
www.ejiw.com
MADE IN USA

PRODUCT NUMBER
00268829

CATALOG NUMBER
2688APT DI

COVER

LOAD RATING
HEAVY DUTY

COATING
UNDIPPED

SPECIFICATION
COVER-DUCTILE IRON
ASTM A536

OPEN AREA
N/A

√ DESIGNATES
MACHINED SURFACE

DRAWN	DATE
DEW	8/30/2007
LAST REVISED	DATE
DEW	5/19/2009